Application of Sliding Mode Controller in DC/AC and DC-DC Power Converter System.

RANJEET KUMAR MAHAKHUDA

DEPERTMENT OF ELECTRICAL ENGINEERING

NATIONAL INSTITUTE OF TECHNOLOGY

ROURKELA -769008

MAY 2014

Application of Sliding Mode Controller in DC/AC and DC-DC Power Converter System.

Thesis

Submitted in partial fulfillment of the requirements

For the degree of

Master of Technology

In

Electrical Engineering

(Specialization-Power electronics and drives)

By

RANJEET KUMAR MAHAKHUDA

Roll No. 212EE4391

Under the guidance of

Prof. Somnath Maity

DEPERTMENT OF ELECTRICAL ENGINEERING

NATIONAL INSTITUTE OF TECHNOLOGY

Department of Electrical Engineering

National Institute of Technology, Rourkela

CERTIFICATE

*This is to certify that the thesis entitled "**Application of Sliding mode Controller in DC/AC and DC-DC Power Converter System**" being submitted by **Mr. Ranjeet Kumar Mahakhuda,** to the National Institute of Technology, Rourkela (Deemed University) for the award of degree of Master of Technology in **Electrical Engineering** with specialization in "**Power Electronics and Drives",** is a bonafide research work carried out by him in the **Department of Electrical Engineering,** under my supervision and guidance. I believe that this thesis fulfills a part of the requirements for the award of degree of Master of Technology. The research reports and the results embodied in this thesis have not been submitted in parts or full to any other University or Institute for the award of any other degree or diploma.*

Dr. Somnath Maity
Assistant Professor
Dept. of Electrical Engineering
National Institute of Technology
Rourkela, Odisha, 769008,INDIA

Place: N.I.T., Rourkela
Date:

Acknowledgements

First and foremost, I am truly indebted and wish to express my gratitude to my supervisor Professor Somnath Maity for his inspiration, excellent guidance, continuing encouragement and unwavering confidence and support during every stage of this endeavor without which, it would not have been possible for me to complete this undertaking successfully. I also thank him for his insightful comments and suggestions which continually helped me to improve my understanding.

I am also very much obliged to the Head of the Department of Electrical Engineering, NIT Rourkela for providing all possible facilities towards this work. Thanks to all other faculty members in the department.

Ranjeet kumar Mahakhuda
Rourkela,may 2014

1.Abstract:-

Maintaining good voltage regulation at output and having fast dynamic response under sudden load fluctuation are extremely important in distributed generation (DG) as well as uninterrupted power supply (UPS) systems. This work presents a fixed frequency hysteresis current (FFHC) controller, which is implemented on the basis of sliding mode control (SMC) technique and fixed frequency current controller with a hysteresis band. The controller have the benefit of hysteretic current control having fast dynamic responses and reduces the disadvantages of the variable switching frequency. For this work elliptical sliding surface was taken. These have been verified and compared with the carrier based pulse width modulated (PWM) voltage controller under the same load fluctuation. The proposed method is then applied to islanded single phase - voltage source inverter (VSI) system. The results show that the dynamic response is quite faster than that of widely used PWM-controlled inverter systems. The DC voltage that is required for the inverter input is supposed to given from the output of PV panel with buck converter.In PV system sliding mode control is used to track the maximum power point .Here inverter and buck converter connected to PV array are taken separately.

CONTENTS

LIST OF FIGURE

NOTATIONS AND ABBREVIATIONS

DG	Distributed generation
THD	Total harmonic distortion
SMC	Sliding mode control
FFHC	Fixed frequency hysteretic current
EMI	Electromagnetic Interference
DC	Direct current
AC	Alternating current
RES	Renewable energy source
PV	Photo voltaic
MPPT	Maximum power point tracking
MPP	Maximum power point
PWM	Pulse width modulation
VSI	Voltage source inverter
CSI	Current source inverter
BJT	Bipolar junction Transistor
IGBT	Insulated gate bipolar transistor
MOSFET	Metal oxide semiconductor field effect Transistor
S_1, S_2, S_3, S_4	Switches used in inverter
v	Instantaneous output voltage of inverter
V_{ref} ,Vr	Reference voltage
δ	Duty cycle

MI	Modulating index
V_c	Carrier signal voltage
fo	Output frequency
fc	Carrier frequency
UPS	uninterrptible power supply
S	Sliding surface
U	Control signal
C_{dc}	DC link capacitor
i_L	Inductor current
C	Output capacitance
R	Load resistance
L	Load side inductance
K_p	Proportionality constant
K_d	Derivative costant
u_{eq}	Equivalent control
e(t)	Error signal
β_v	Sensor gain
x_1, x_2	State variable
λ_1, λ_2	Boundaries of the existence regions
f_s	Switching frequency
V_{mpp}	Maximum power point voltage
P	PV module power output
` θ_1, θ_2	Time varying parameter

P&O	Perturb and observe
RHS	Right hand side
LHS	Left hand side

1.1 Introduction

In recent years, researches have been focused on the distributed generation (DG) systems, powered by renewable energy sources, such as, micro turbines, fuel cells, photovoltaic and wind generation due to the limited fossil fuel and environmental impacts [1]. The above units are interfaced to the utility network through the power electronics converter systems. The DG systems can be operated either in grid connected or in islanded mode. For the sake of simplicity, it is preferable to operate in islanded mode instead of grid connected mode. In the islanded mode (when the grid is isolated), the local loads are supplied by the DG system, which is usually act as a controlled voltage source. A single phase islanded DG system as shown in Fig. 1, supplies the non-linear and critical step changing loads.

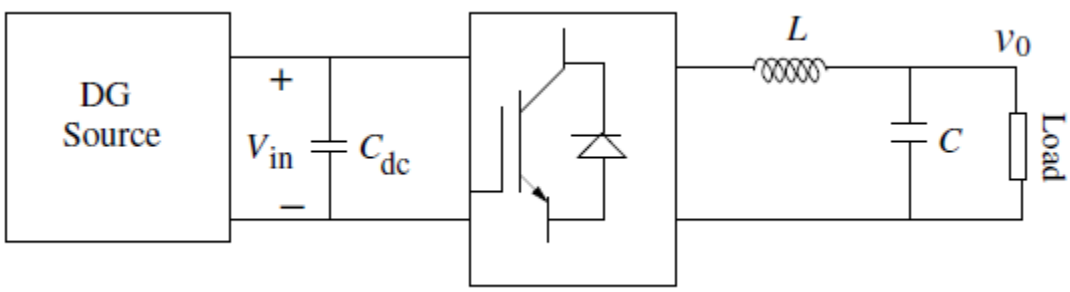

Fig. 1. Single-phase islanded DG system.

The above loads deform the desired sinusoidal output voltage of inverter [2]. For all types of loads, the total harmonic distortions (THD) of the inverter output voltage should be as per the IEEE standard 1547, i.e., less than 5%. Moreover, the closed-loop control system should be capable of achieving high performance in the sense of fast dynamic response and robustness under sudden load-and line fluctuations [3].

1.2Literature Survey

In recent past, several control strategies have been suggested for the inverter operations, depending on how the error signal is processed [4]. Out of these available techniques, in maximum cases, the control methodology based on constant-frequency pulse width modulation (PWM) techniques like dead beat control, conventional PI control, repetitive control, and adaptive control have been suggested to improve the robustness and the dynamic response of inverter [5], [6]. However, in all the above cases, the control design is normally based on voltage mode control, which leads to the output voltage waveform sensitive to the load variations. Alternatively, non-linear control scheme, namely, sliding mode control (SMC) strategy has been proposed in dc-dc switching regulators [7] since these are well known for their robustness, guaranteed stability and good dynamic response under wide range of operating conditions. The switching control law of SMC is to drive the state trajectory from any initial point to a perticular surface in the state space called sliding or switching surface, and maintain it on this surface for rest of time. However, SMC operates at variable switching frequency at which an undesirable chattering phenomenon may occur. In order to compensate the above drawback partially, the SMC are realized by means of a hysteresis comparator [8], which also provides a variable switching frequency. Several authors have proposed constant frequency SMC by means of a variable width hysteresis controller [9],[10] which can however lead to a complex analog implementation, thereby involve more cost. Moreover the width of hysteresis band depends on the converter parameters. Alternatively fixed frequency SMC can also be achieved by comparing an external ramp signal to the switching surface [10]. Hence in these controllers, the switching instant does not depends on the switching surface behavior.

In this work, a fixed frequency hysteretic current (FFHC) controller is proposed to improve the dynamic response of a single phase inverter subjected to a sudden fluctuation of load. The proposed controller is designed on the basis of SMC technique. A hysteresis band is employed to generate the switching law for the inverter circuit and that has been implemented using a simple flip-flop with externally driven constant frequency clock pulses. In spite of this constant frequency switching operation, it has all the properties of an ideal SMC such as simple to design and good transient performance. Also it acts as a current limiter to prevent the overloading of converter, and gives fast transient response under sudden step load fluctuation.

1.3 Objective of research work

Due to variation of parameters like nonlinear component in the converter or inverter, line and load variation, electromagnetic interferences (EMI) the converter or inverter were deviated from the desired operating condition. The system will not operate in steady state, if the parameter deviation increases. Many control methods are used to control and solve the above problem. All control strategy has its own advantages and disadvantages. From this we have to choose a particular control strategy which is most preferred under specific condition. A particular control strategy is demanded which has the best performances under different conditions. Here load is varied and its dynamic performance has to be increased. The thesis defines the cause by which a specific control method is selected, i.e. the sliding mode control (SMC), among all control methods. A detailed research analysis is done of the sliding mode control is implemented in some DC/AC and DC-DC converter topologies.

1.4 Motivation

Now a days the use of renewable energy sources such as solar energy and wind energy is increasing due to the detrimental effect of fossil fuel and greenhouse effect. The demand of renewable energy system use can be improved by designing controller to operate the system in a better way.In case of PV system the task of controller is such that the system should deliver maximum power as well as it should operate in better way in grid connected mode. To operate the PV system in grid connected mode we require inverter. The task of the controller to track MPP is to maintain the PV array voltage at Vmpp at rapidly varying irradiation and varying load condition. The task of the controller used for the inverter is to improve the dynamic response as well as voltage regulation in islanded mode as well as grid connected mode. In this thesis, SMC controller is designed for islanded inverter as well as for MPPT of PV system. Through this controller, the dynamic performance and voltage regulation of inverter can be improved significantly. Also, fast tracking of MPP when there is rapid variation of irradiation, temperature and other noise effect.

1.5 Organization of Thesis

The following presents the outline of the work in details.

Chapter 1: Presents a review on the available literature control techniques of DC/AC converter and PV system connected with DC-DC converter. This chapter explains the various types of linear and nonlinear control techniques. Among them SMC is the best control method for inverter due to its fast dynamic response, good voltage regulation in case of inverter as well as fast MPP tracking when there is rapid variation of irradiation temperature etc in case of PV system

Chapter 2: In this chapter the different types of inverter and the control technique such as PWM and SMC are explained briefly.Also the MATLAB result of SMC controller is compared with that of PWM technique.

Chapter 3: In this chapter a nonlinear control method(Similar to that of SMC) to track the MPP of PV system connected to buck converter is explained.Also the Pspice result is given for irradiation variation and load variation.

Chapter 4: The SMC is implemented to the single phase DC/AC and MMP tracking of PV system connected to DC-DC buck converter .The results are verified with the simulation results and it includes the thesis conclusions and further research directions. Finally, the researches on and applications of the SMC for DC/AC and DC-DC converters are given in details.

Chapter2. Sliding mode controller for inverter

2.1. Inverter

Mainly there are two types of inverter that is (1)Single phase invert(2)Three phase inverter.In single phase inverter input is dc supply and output is single phase ac supply. Single phase inverter may of two type(a)Single phase voltage source inverter (VSI)(b)Single phase current source inverter (CSI**).**In case of single phase VSI DC side voltage is kept constant by connecting large capacitor in parallel to the input, have low impedance (voltage source, or bulk cap) and AC side voltage is square wave or quasi- square wave.AC side current is determined by the load connected at the output.Here anti- parallel diodes are connected to provide energy feedback path.(freewheeling diodes , feedback diodes).The VSI circuit has direct control over the output voltage.

Single phase VSI may of two type

- Half bridge inverter
- Full bridge inverter

2.1.1.Half bridge inverter

Half bridge inverter consists of two switches S_1 and S_2 with antiparallel diode. This switches may be BJT,thyristor,IGBT,MOSFET etc depending upon the frequency of operation.It also have two capacitor V_{c1} and V_{c2} of equal magnitude which divides the input DC voltage into two equal half.The operation of the switch S_1 and S_2 are complementary i.e. when S_1 is on S_2 is off and viceversa.

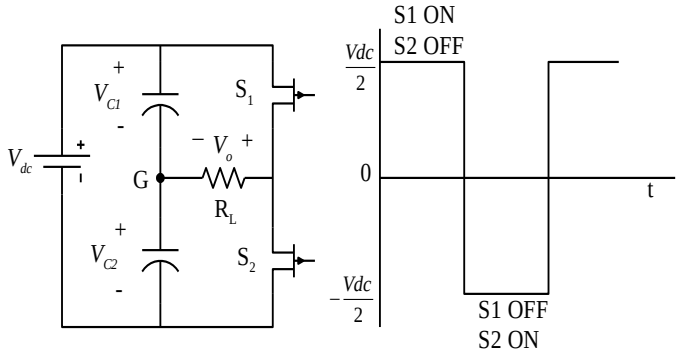

Fig2 Half bridge VSI

2.1.2.Full bridge inverter

Full Bridge inverter consists of four switches with antiparallel diode across them.switches S_1 and S_2 act simultaneously,during this time switches S_3 and S_4 are in off state.After 180 ^{0} phase delay switches S3 and S4 are turned on where as S1 and S2 are turned off i.e. operation of switches (S_1,S_2) and (S_3,S_4) are complementary. Antiparallel diode comes into action when the load is inductive to provide the energy feedback path.

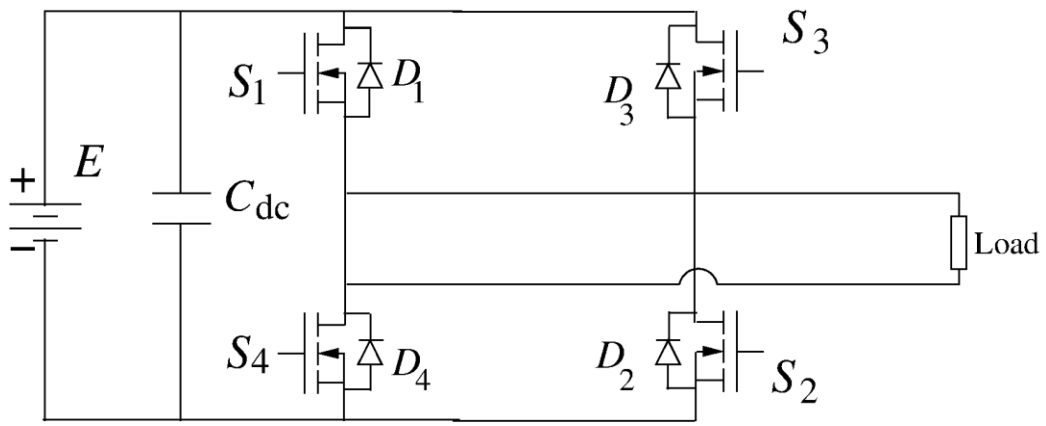

Fig.3 Full bridge VSI

In case of single phase CSI input current is kept constant by connecting a large inductor in series with the input DC source ,have high impedance (current source, or large inductor).AC side current is quasis-quare wave. AC side voltage is determined by the load connected to the output. No anti-parallel diodes are needed. Sometimes series diodes are needed to block reverse voltage for other power semiconductor devices. The CSI circuit has direct control over the output current.

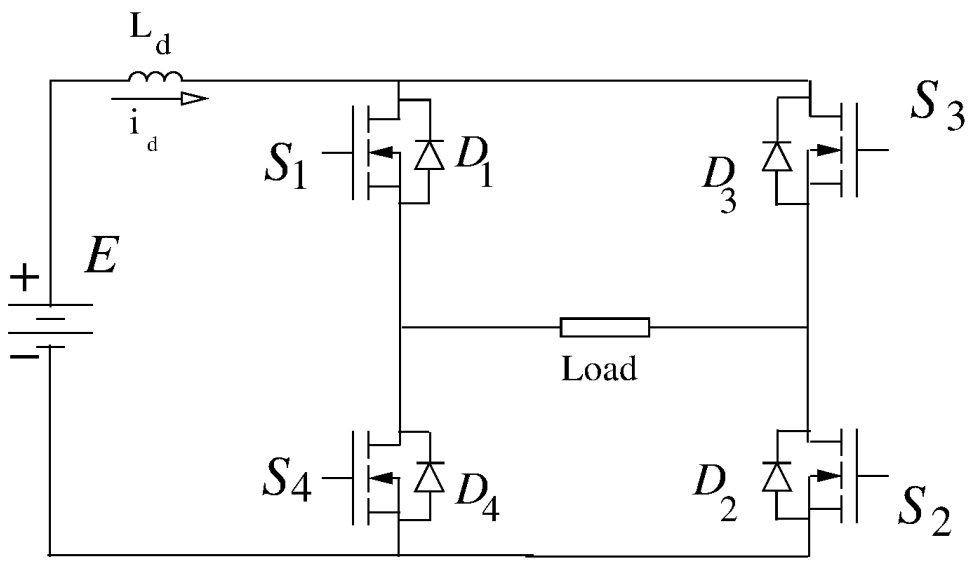

Fig4. Single phase CSI

Inverter have variable voltage variable frequency properties. Frequency of the output can be controlled by controlling the frequency of the gate pulse given to the switch and magnitude of the voltage can be controlled by controlling magnitude of the input DC voltage.There are also some control methods by which we can control the output voltage of inverter.

2.2 Pulse Width Modulation in Inverters

The output voltage of an inverter can be regulated by regulating the gate pulse applied to the gate of the switch of the inverter. One of the method of doing this is by pulse-width modulation control used within an inverter. In this method, a constant dc voltage is applied to the inverter and a regulated output ac voltage is obtained by changing the on and off periods of the inverter switches. This is the commonly used method of regulating the output voltage and this method is named as Pulse-Width Modulation (PWM) Control. PWM techniques has the following advantages. These are:

(i) Without using any additional components, the output voltage can be controlled easily. (ii) With this method, the low order harmonics can be minimized with its output load voltage control. The higher order harmonics can be suppressed easily and the filtering components are minimized. The main drawbacks of this method is that the switches used are expensive as they must have less turn-on and turn-off times. PWM switching in inverters are mostly used in industrial applications. PWM switching techniques are characterized by same amplitude pulses. The width of the pulses is modulated to get the desired inverter output voltage with reducing its harmonic contents.

The various PWM switching techniques are given below:

(a) Single-pulse modulation

(b) Multiple pulse modulation

(c) Sinusoidal pulse width modulation(Carrier based Pulse Width Modulation Technique)

2.2.1Single Pulse Width Modulation

For this modulation technique there is only one generated pulse per half cycle. The output is controlled by changing the width of the gate pulses. The generated gate pulses are obtained by comparing a rectangular reference ac signal with a triangular carrier signal. The frequency of both signals are nearly equal.

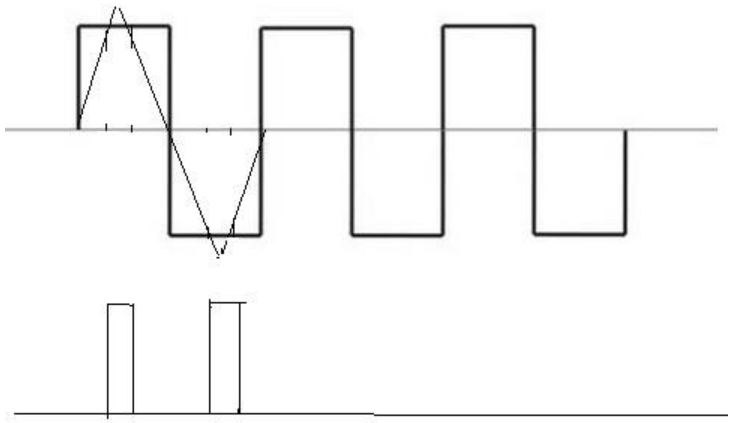

Fig. 5 Single Pulse Width Modulation

The rms ac output voltage

$$V_O = V_S\sqrt{\frac{2t_{on}}{T}} = V_S\sqrt{2\delta} \qquad (1)$$

Where

δ =duty cycle= $\frac{t_{on}}{T}$

Modulation Index (MI) = $\frac{V_r}{V_c}$

Here *Vr* = Amlitude of Reference voltage and *Vc* = Amlitude of the Carrier wave voltage

By changing the control reference signal amplitude *Vr* from 0 to *Vc* the width of the pulse t_{on} can be adjusted from 0 secs to T/2 secs and the rms value of the output voltage *Vo* will be from 0 to *Vs*.

2.2.2Multiple Pulse Width Modulation

In this modulation technique, multiple number of output equidistance pulses per half cycle are generated. The generated gate pulses are obtained by comparing a rectangular reference signal with a triangular carrier signal. The reference signal has the same frequency as that of output frequency (fo). The no. of pulses generated per half cycle is estimated by :

$$p = \frac{f_c}{2 f_o} \qquad (2)$$

The rms output ac voltage

$$V_0 = Vs\sqrt{\frac{P\delta}{\pi}} \qquad (3)$$

Where δ =duty cycle= $\frac{t_{on}}{T}$

The changing of modulation index from 0 to 1, the pulse width changes from 0 to π/p and the output voltage from *0 to Vs*.

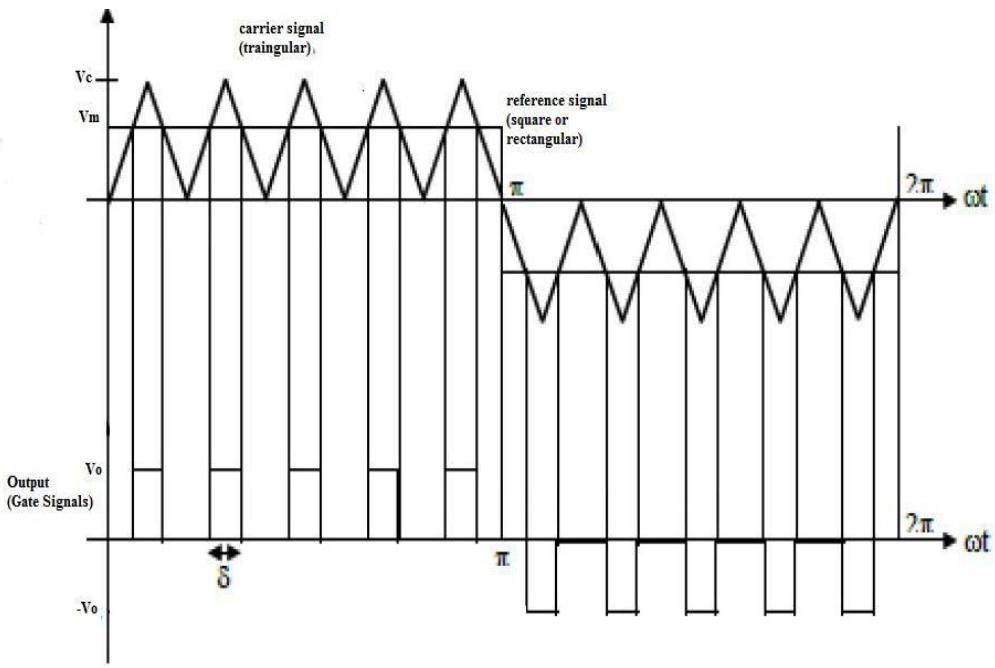

Fig.6 Multiple Pulse Width Modulation

2.2.3. Sinusoidal Pulse Width Modulation (SPWM):-

In this modulation process, there are multiple numbers of pulses per half cycle and the width of the pulses are different. Each pulse width is changing in according to the amplitude change of the sine wave, which is a control wave. The gate pulses are obtained by comparing a sinusoidal control signal with a high frequency triangular carrier signal. The rms output ac voltage

$$V_O = V_S\sqrt{\frac{P\delta}{\pi}} \rightarrow V_S\sum_{m=1}^{2p}\frac{\delta_m}{\pi} \qquad (4)$$

Where p=pulse number and δ= pulse width

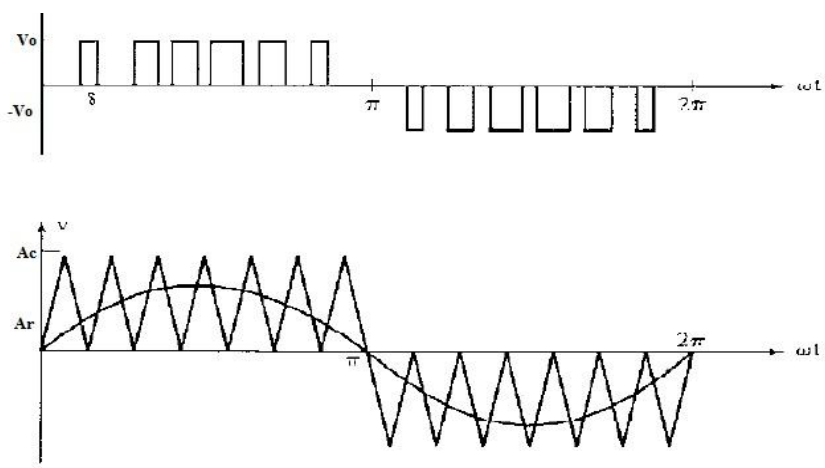

Fig7: Sinusoidal Pulse Width Modulation

2.3Filter:-

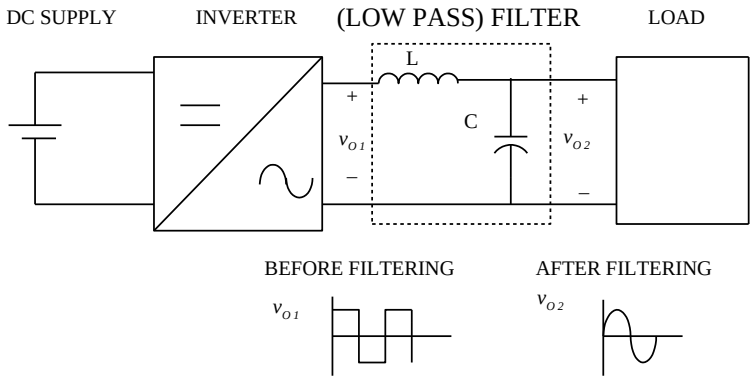

Fig.8 Inverter With Filter

The inverter output voltage is a squre wave which gives zero average value. It has harmonics. Also, use of renewable energy source is rapidly increasing in the modern distribution networks because of the disadvantage of the nonrenewable energy source. They need inverter in order to interface to the grid. The switching frequency of these converters is very high and which may introduce high order harmonics that can interfere with neighborhood EMI sensitive loads or equipment which are connected to the grid. Selecting a higher value of line-side inductance can be a solution, but, this will increase the cost of the system and gives the sluggish response. On the other hand, choosing an LCL-filter configuration permits the reduction of the inductance value and minimizing the switching frequency pollution emitted into the grid. An LC low-pass filter is generally connected at the output of the inverter to minimize the high frequency harmonics component. In certain applications like UPS, where pure sine wave is essential, good filtering is must. Whereas in some applications, like AC motor drive, filtering is not important.

2.4 Sliding mode signal tracking

Normally, SMC is considered as a good alternative to the control of switching converters. The main advantages of such control scheme over classical one are; its robustness, and high dynamics performances under parameter fluctuations. The various steps of this control scheme can be outlined by using the equivalent control concept, as follows [13,20].The first step is the selection of the switching surface S(x; t) (where x is the system state vector), for the single phase VSI system, so that, it can act as a reference path for the trajectory of the controlled system. It is important to note that for an ideal SMC, it requires an infinite switching frequency, so that, the state trajectories in neighborhood of the switching surface can move precisely along the surface. But operation of such infinite switching in power electronics inverter system is practically impossible. It is therefore necessary a typical control circuit that would require a relay or hysteresis function to restrict the infinite switching frequency as shown in Fig. 2(a). Where the control signal is defined as

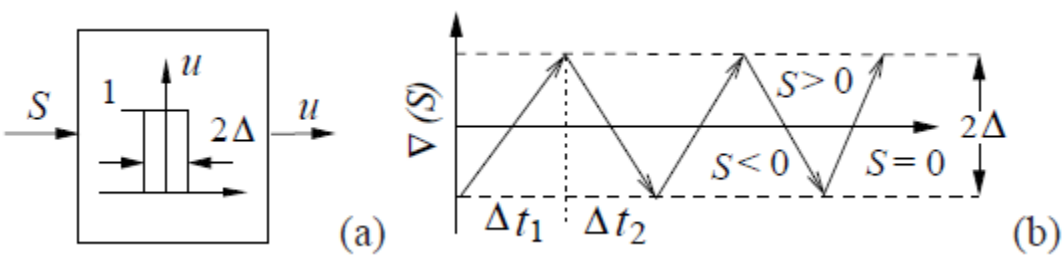

Fig. 9. Schematic diagram showing the: (a) hysteresis function; and (b) the state trajectory in the vicinity of sliding surface S = 0.

$$u = \begin{cases} 1 & \text{when } S > +\Delta \text{ and } \dot{S} < 0 \\ 0 & \text{when } S < -\Delta \text{ and } \dot{S} > 0 \end{cases} \quad (5)$$

Note that, for the hysteresis function (5), one can get the finite switching frequency. The switching will occur with the band S = ± Δ, with a frequency depend upon the slope of the inductor current i_L. This hysteresis function therefore causes a trajectory oscillations within the vicinity of 2Δ around the surface as shown in Fig. 9(b). The next step is achieving the equivalent control u_{eq} by applying the invariance condition

$$\frac{ds}{dt} = 0 \text{ (for S = 0 and u = } u_{eq}\text{)} \qquad (6)$$

The existence of the equivalent control u_{eq} ensures the feasibility of a sliding motion over the switching surface S(x, t) = 0 . Moreover the equivalent control permits obtaining the sliding domain, given

$$min(u^-, u^+) < u_{eq} < max(u^-, u^+) \qquad (7)$$

Where u^- and u^+ are the control values for S < 0 and S > 0 respectively. The sliding domain is the state plane region where the sliding motion is confirmed. For the final step, the control law is ensuring the Lyapunov stability criteria, i.e $\frac{ds^2}{dt} = 0$. The first problem considered here points out how the output load voltage v(t) of the single phase full bridge voltage source inverter, shown in Fig. 10 can be forced to track the externally given sinusoidal reference voltage $V_{ref} = A\sin\omega t$ by applying the sliding mode control technique.

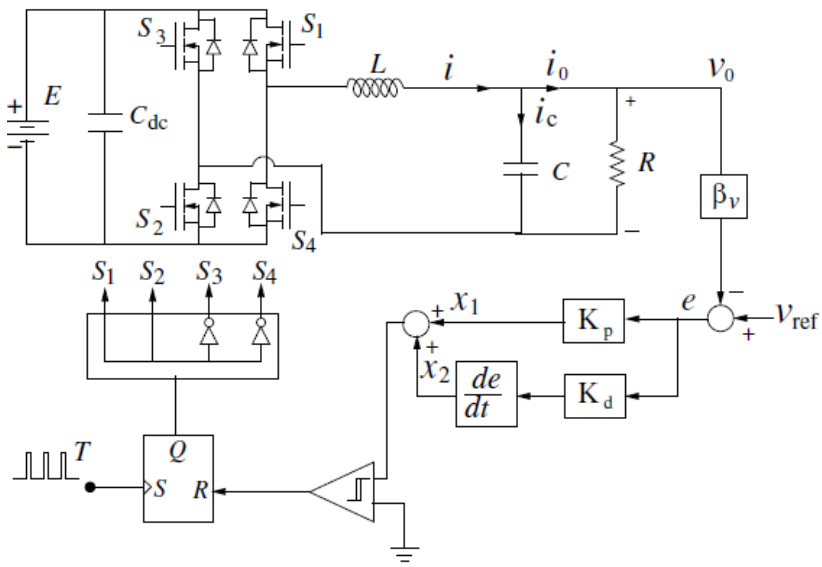

Fig.10. The proposed FFSMC-controlled single-phase inverter.

The VSI consists of a dc supply voltage E, a dc link capacitor C_{dc}, filter elements L and C, a load resistance R, and four controllable power switches S1 to S4.The switches are controlled by the fixed frequency sliding mode control logic. Assuming all components are ideal, the state space equations of VSI can be written in matrix form, as

$$\begin{pmatrix} \frac{di}{dt} \\ \frac{dv}{dt} \end{pmatrix} = \begin{pmatrix} 0 & -\frac{1}{L} \\ \frac{1}{C} & -\frac{1}{RC} \end{pmatrix} \begin{pmatrix} i \\ v \end{pmatrix} + \begin{pmatrix} \frac{E}{L} \\ 0 \end{pmatrix} u. \tag{8}$$

where i and v are the inductor current and output voltage, and $u \in (1,-1)$ is the discontinuous control signal, depending on which switches are active, namely, u = -1 corresponds to output inverter voltage equal to –E, u = +1 corresponds to output inverter voltage equal to +E .Moreover, in accordance with the sliding mode theory [15],the switching surface can be

designed, which leads to a robust output voltage behavior towards any load variation and source fluctuations, due to its independence on converter parameters.

$$S(t) = k_p e(t) + k_d \frac{de(t)}{dt} = 0 \quad (9)$$

$$S(t) = \lambda e(t) + \frac{de(t)}{dt} = 0 \quad (10)$$

Where e(t) stands for the output voltage error, which is defined as e(t)=v_{ref} (t)-v(t) and $\lambda = \frac{k_p}{k_d}$.

The sliding motion provides a first order dynamic transient response over the switching surface leading to the desired steady state behavior, that is given in, :

$$\begin{aligned} e(t) &= e(0).e^{-\lambda t} \\ v(t) - v_{ref}(t) &= e(0).e^{-\lambda t} \\ v(t) &= e(0).e^{-\lambda t} + v_{ref}(t) \end{aligned} \quad (11)$$

As $t \to \infty$, the steady state response is

$$v(t) = v_{ref}(t) \quad (12)$$

This conforms a direct tracking of the reference voltage vref (t) of the output voltage v(t). By applying the invariance condition to switching surface S(t), the corresponding equivalent control is given by

$$\frac{ds}{dt} = 0 \quad (13)$$

By replacing (8), (10) and (12) in the (13)

$$u_{eq} = \frac{LC}{E}\left[\frac{d^2 v_{ref}(t)}{dt^2} + \frac{1}{RC}\frac{dv_{ref}(t)}{dt} + \frac{v_{ref}(t)}{LC} + \left(\lambda^2 - \frac{\lambda}{RC} + \frac{1}{LC}\right)\right] e(0)e^{-\lambda t} \quad (14)$$

As can be seen from (10), the constant λ has to be selected as large as possible , for a fast transient response. However, as per stated in [14], the greater the value of λ, the faster the transient response, but the greater the equivalent control value . As a consequence, the sliding motion over switching surface S(t) can be lost due to the bounds on control.

2.4.1Constant frequency SMC controlled single-phase VSI

In order to fix-up the varying switching frequency, we therefore propose a constant-frequency hysteresis controller. The schematic diagram of proposed FFSMC-controlled VSI is shown in Fig. 10.

A. Dynamics of $1-\phi$ VSI and Its Mathematical Model

A time independent control scheme can be achieved from a time dependent one by expressing the switching surface (10) only in terms of the power state variables. The output voltage under steady state (12) is given by

$$\begin{aligned} v(t) &= v_{ref}(t) = Asin\omega t \\ t &= \frac{1}{\omega}\arcsin\frac{v}{A} \end{aligned} \tag{15}$$

Then the switching surface becomes

$$S(v,\dot{v}) = \dot{v} - A\omega\cos\left(\arcsin\frac{v}{A}\right) \tag{16}$$

by using trigonometric properties, the above can be simplified as

$$S(v,\dot{v}) = \dot{v} \mp A\omega\sqrt{1-\left(\frac{v}{A}\right)^2} = 0 \tag{17}$$

where the - and + signs for $\dot{v} >$ and $\dot{v} < 0$, respectively.Then (10) can be expressed as

$$S(v,\dot{v}) = \dot{v}^2 + \omega^2.v^2 - \omega^2.A^2 = 0 \quad (18)$$

$$S(v,\dot{v}) = \left(\frac{v}{A}\right)^2 + \left(\frac{\dot{v}}{\omega A}\right)^2 - 1 = 0 \quad (19)$$

Equation (11) represents a canonical expression of an ellipse in $(v,\dot{v})$ plane with centre at (0, 0) and x-intercept and y-intercept $A\omega$ and A respectively as shown in Fig. 11. So by choosing the switching surface (19), the desired ac output will be obtained over the surface $S(v,\dot{v}) = 0$. Now, let us define the state variables as $x_1 = \beta_v v$ and $x_2 = \beta_v \dot{v}$. By considering the sensor gain β_v, the switching surface (19) becomes

$$S(x) = \frac{{x_1}^2}{A^2} + \frac{{x_2}^2}{\omega^2 A^2} - 1 = 0 \quad (20)$$

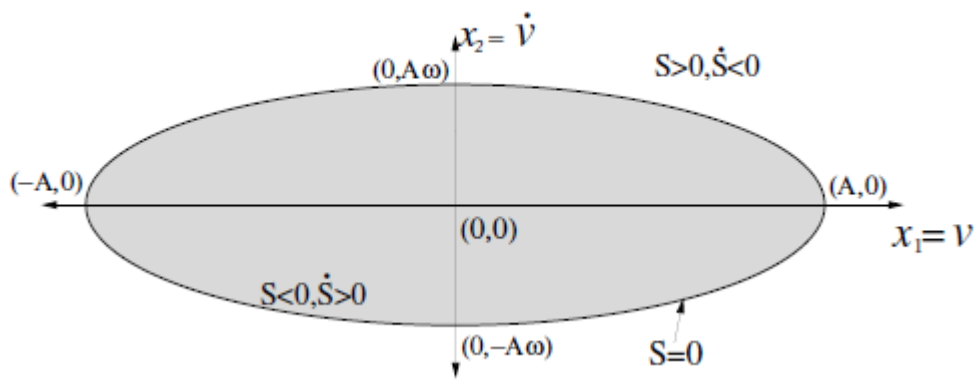

Fig. 11. Ellipsoidal switching surface in the phase plane for the single-phase inverter.

Then, the system dynamics in canonical state variables form can be written as

$$\begin{pmatrix} \frac{dx_1}{dt} \\ \frac{dx_2}{dt} \end{pmatrix} = \begin{pmatrix} 0 & 1 \\ -\frac{1}{LC} & -\frac{1}{RC} \end{pmatrix} \begin{pmatrix} x_1 \\ x_2 \end{pmatrix} + \begin{pmatrix} 0 \\ \frac{\beta_v}{LC}E \end{pmatrix} u. \quad (21)$$

Then for $u \in (-1,1)$ the existence condition and the equivalent control can be derived as per the Utkin theory [16]. The SMC exists in the vicinity of the switching surface S(x) if the following local reachability conditions $\lim_{S(x)\to 0^-} \frac{dS(x)}{dt} > 0$ and $\lim_{S(x)\to 0^+} \frac{dS(x)}{dt} < 0$ or $\lim_{S(x)\to 0} \frac{dS(x)}{dt} S(x) < 0$ are simultaneously satisfied. The existence condition can be derived by simply substituting the time derivative of S(x)

$$\frac{dS(x)}{dt} = \frac{\partial S(x)}{\partial x}\frac{dx}{dt} = \begin{cases} J\frac{dx}{dt} > 0 & if \quad S(x) < 0 \\ J\frac{dx}{dt} < 0 & if \quad S(x) > 0 \end{cases} \tag{22}$$

into this condition, where $J = \frac{dS(x)}{dx} = \begin{bmatrix} \frac{2x_1}{A^2} & \frac{2x_2}{(A\omega)^2} \end{bmatrix}$.Replacing (21) into (22) and applying the control law(19), the existence region of SMC can be expressed by

$$\lambda_1 = \frac{2k_d^{\ 2}}{A^2 CR\omega^2} x_2 \left[\frac{(LC\omega^2 - 1)}{L} Rx_1 - x_2 + \frac{\beta_v R}{L} E \right] \tag{23}$$

For u=+1

$$\lambda_2 = \frac{2k_d^{\ 2}}{A^2 CR\omega^2} x_2 \left[\frac{(LC\omega^2 - 1)}{L} Rx_1 - x_2 - \frac{\beta_v R}{L} E \right] \tag{24}$$

For $u = -1$

Where λ_1 and λ_2 are the boundaries of the existence regions. Unlike [9], [10], both the above equations are of the second order with parabolic shape. The limiting boundaries (23) and (24) give the necessary region of existence region for SMC. By using the condition $\dot{S}$ and applying the (14) the equivalent control can be found by

$$u_{eq} = \frac{\frac{1}{C}\frac{di_c}{dt} + \frac{1}{LC}v - \omega^2.v}{\frac{1}{LC}.E} \tag{25}$$

So, this u_{eq} control assures the feasibility of the SMC over the switching surface S(x, t)

B. Constant Frequency Operation

The operating switching frequency of the sliding mode control is variable and it depends on various factors, like value of hysteresis band, parameters of inverter and the load condition[21,24]. So the constant switching frequency operation is highly essential to lock the desired frequency of the VSI. This can be achieved by taking a hysteresis comparator followed by a S-R flip flop which is set by a clock signal running at the desired operating frequency. At every rising edge of the clock, the PWM signal u is set to 1 and it is reset to 0 when the switching surface S(x) reaches the threshold of the comparator. The advantages of this scheme are its quite simplicity and exact operating frequency during steady state. But during the transient operation the switching frequency changes because during this period, two consecutive rising edges of the clock may occur without a reset event. Therefore, after obtaining the mathematical model (20) and (21) and constant-frequency switching logic presented, we only discuss some numerical results.

2.5 Simulation results

In order to verify the proposed control scheme, the above model has been simulated by MATLAB/SIMULINK. The resonant frequency is taken 2.5 KHz to design the low pass LC filter. The sampling frequency is $100\mu\sec$. The parameters required for simulation of a 1 kVA inverter are: E = 175 V, V_0 =110 V(rms), f = 50 Hz, f_s = 20 kHz, L =0.75 mH, C = $66\mu F$, load register R = 17 . All the parameters are chosen to attain the best transient performance of the system. β_v is selected for considering the electronic circuits limitation and the value is β_v = 0.0454. The parameter k_p and k_d are chosen to be 11.8 and 10^{-4} which keep the tracking performances within the minimum level. The phase plane plot of the output voltage v and the

voltage derivative $\dot{v}$ are shown in Fig. 12(a) under the proposed ellipsoidal surface sliding mode control on full load condition. The system trajectory shown in this Figure moves along the curved switching surface with a switching frequency of the clock pulse. The steady state response of the output voltage and load current are shown on Fig. 12(b). The THD of the output voltage is found about 0.73% at the full load condition.The simulation results of the proposed control scheme under step load changes are verified in phase plane to examine the load fluctuation effect. Fig. 13 (a) and (b) shows the responses of the controller under step load fluctuation by taking the ellipsoidal switching surface. The system trajectory defined in (10) takes long time to settle when the fluctuation occurs at outside of the existence region where as it will quickly settle at inside the existence region. Similarly Fig. 14(a)and (b) shows the dynamic response of the controller under step load change of no-load to full load and full load to no load respectively.From the figures, it is observed that the time taken by the proposed controller to attain the steady state after load change is 0.6 msec and 0.85 msec for the above two cases.

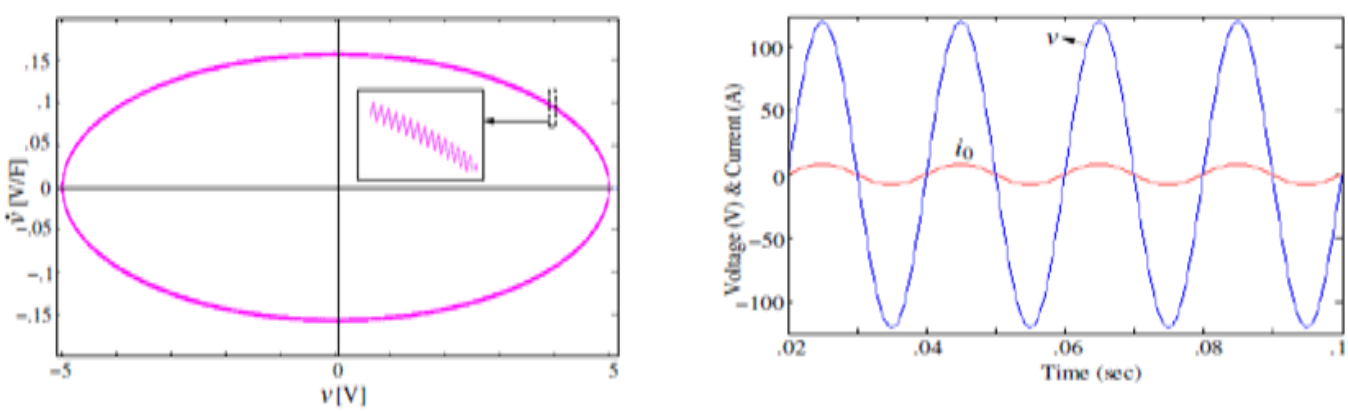

(a) (b)

Fig12. Steady state response at the rated load (a) phase plane plot under proposed ellipsoidal switching surface (b) time plot of the of the output voltageand load current.

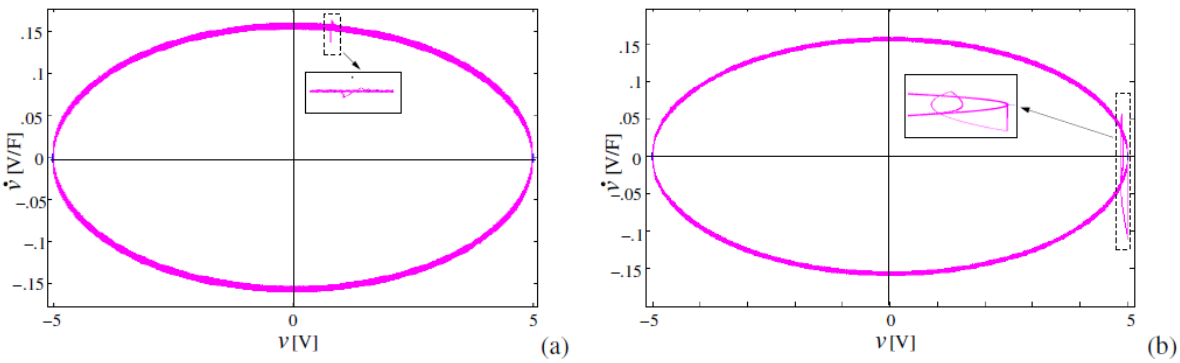

Fig.13.The system trajectory under load fluctuation (a) hitting in the existance region (b) hitting in the non-existance region.

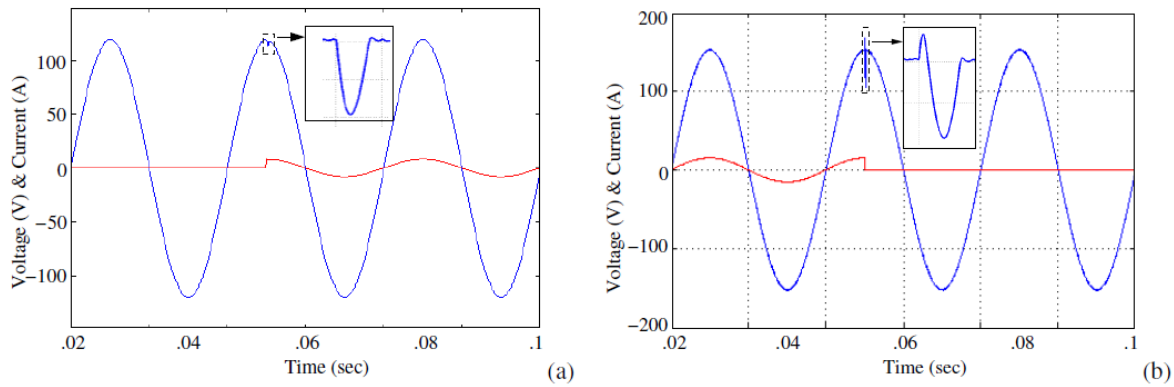

Fig.14Transient response of the output voltage and load current of the proposed controller under step load change : (a) from no-load to full load (b) from full load to no-load.

2.6 Conclusion

In this paper, a FFSMC controller is implemented on the basis of SMC technique for a single phase full bridge VSI. Since SMC produces a huge chattering problem, so a hysteretic function is employed to generate the switching law.A fixed frequency operation of inverter is achieved by a simple flip-flop with the externally driven constant frequency clock pulse

CHAPTER3. SLIDING MODE CONTROLLER FOR DC-DC BUCK CONVERTER CONNECTED TO PV SYSTEM TO TRACK MPP

3.1 Introduction

From the p-v curve of PV system it is clear that maximum power will be delivered by the PV system at a particular voltage that is called the maximum power point(MPP) voltage V_{mpp}. It is always desired that a system should deliver maximum power hence it is required to maintain the output voltage of PV system at V_{mpp}. The V_{mpp} of a PV system changes with change in irradiation ,temperature ,ageing effect etc.By denoting these time varying parameters (irradiation , temperature etc) as $(\theta_1, \theta_2 \ldots)$ $\frac{\partial p}{\partial t}$ can be written as

$$\frac{\partial p}{\partial t} = \frac{\partial p}{\partial v}\frac{\partial v}{\partial t} + \underbrace{\frac{\partial p}{\partial \theta_1}\frac{\partial \theta_1}{\partial t} + \frac{\partial p}{\partial \theta_2}\frac{\partial \theta_2}{\partial t}}_{noise/confusion} \ldots\ldots\ldots \qquad (26)$$

There are different control methodology to track MPP such as perturb and observe (P&O), incremental conductance method etc. Due to simplicity in implementation P&O method is used mostly. In P&O MPPT tracking method the output voltage of PV panel is increased or decreased in steps, and the power output is recorded. If the voltage is increased in the first step and the power increases, then voltage has to be increase another step otherwise if power decreases voltage has to be decrease. Similarly if voltage is decreased in first step and power increases then voltage has to be decrease another step otherwise if power decreases voltage has to be increase. Although implementation is simple When V_{mpp} changes rapidly due to change in irradiation, temperature and other noise parameter then speed of tracking the V_{mpp} by P&O method decreases. Hence for such condition other methodology are choosen. A control strategy for tracking of MPP that is based on nonlinear dynamics thepry is as follows.

The MPP is automatically the only attractor of the system, which showing a basin of attraction globally. Therefore, the system has ensured to track the MPP automatically under normal state and dynamic conditions[25,26].

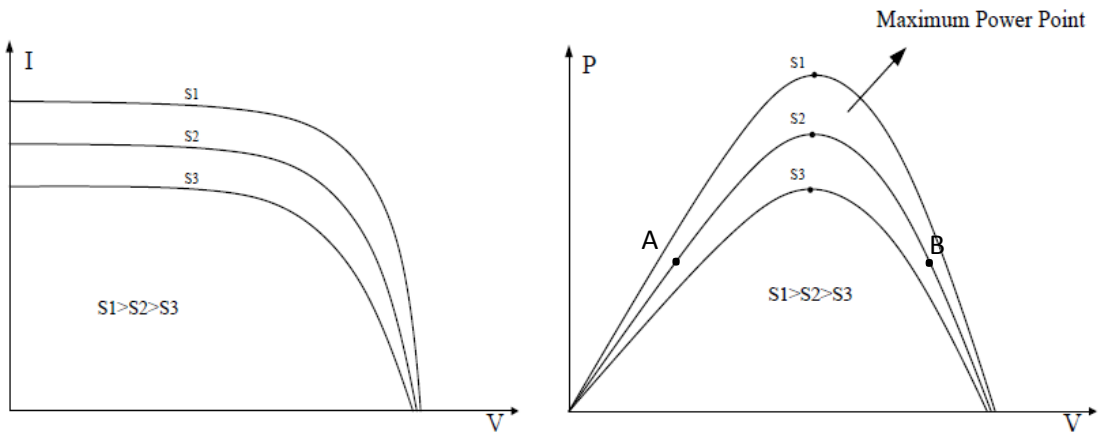

Fig .15.I-V and P-V characteristics of PV arrays under different solar irradiation

3.2 Synthesis of the control algorithm:

Considering no change in Irradiation and temperature and other noise term in equation(1) then eq(1) can be written as

$$\frac{\partial p}{\partial t} = \frac{\partial p}{\partial v}\frac{\partial v}{\partial t} \qquad (27)$$

At $v=$Vmpp we have *dpldv* = 0. This is generally assumed that the p-v characteristic has single global MPP. From the p-v characteristic it can be written that

$$\frac{\partial p}{\partial v} = \begin{cases} > 0 \text{ if } V<V_{mpp} \\ = 0 \text{ if } V=V_{mpp} \\ <0 \text{ if } V>V_{mpp} \end{cases} \qquad (28)$$

From the above equation it is clear that when $v < V_{mpp}$ we have $\frac{\partial p}{\partial v} > 0$,so to maintain the PV module voltage at V_{mpp} we have to increase the voltage v.On the other hand when $v > V_{mpp}$ we have $\frac{\partial p}{\partial v} < 0$,so to maintain the PV module voltage at V_{mpp} we have to increase the voltage v.But when $v = V_{mpp}$ we do not have to increase or decrease the module voltage v.

In differential form the above condition can be written as:

$$\frac{\partial v}{\partial t} = \dot{v} = \begin{cases} > 0 \text{ if } V<V_{mpp} \\ = 0 \text{ if } V=V_{mpp} \\ < 0 \text{ if } V>V_{mpp} \end{cases} \qquad (29)$$

In a single equation the above condition can be written as $\dot{v} = -k(v-V_{mpp})$, here k is a positive constant which represent the speed of convergence. If the larger value of k is taken, the faster the system will track MPP i.e. faster transient response. By Comparing Eq(28) and (29) the overall control methodology can be written as

$$\dot{v} = k\frac{\partial p}{\partial v} \qquad (30)$$

where $k > 0$.From this it is clear that sign of $\dot{v}$ depends upon the sign of $\frac{\partial p}{\partial v}$. Ignoring noise effect in (26), we have

$$\frac{\partial p}{\partial v} = (\partial p/dt)/(\partial v/\partial t) = \dot{p}\big/\dot{v}.$$

Therefore, eq(30) can be written as

$$\dot{v} = k\,\dot{p}/\dot{v} \quad . \qquad (32)$$

But there are problems during the practical implementation of this equation as $\dot{v}$ appear on both side of it. As the value of RHS of the above equation changes it will change the value of $\dot{v}$ on the LHS of the equation which will again change the value of the right hand side of the equation due presence of $\dot{v}$.As a result a algebraic loop will continue. Due to this algebraic loop a high frequency oscillation will occur. Again when $\dot{v}$ become zero RHS of eq(32) have a singularity point as well as analogue dividers are not suitable as they have many imperfection. Eq(32) can also be written as $\dot{v}^{\,2} = k\,\dot{p}$ but this will not solve the problem as squaring $\dot{v}$ will not give the information regarding the sign of $\dot{v}$. The above problem can resolve By writing eq(32) as

$$\mathrm{sgn}(\dot{v}) \leftarrow \mathrm{sgn}(\dot{p}/\dot{v}) \qquad (33)$$

where Sgn is the modified signum function which do not return zero value that is Sgn x = -1 if x < 0, +1 if $\mathbf{x} \geq 0$ and '$\leftarrow$'assigns the value of RHS to LHS of control equation. Again we can write sgn($\dot{p}/\dot{v}$) as

$$\mathrm{sgn}\,(\dot{p}/\dot{v}) = \mathrm{sgn}\,\dot{p}/\mathrm{sgn}\,\dot{v} \qquad (34)$$

So eq(33) can be written as sgn($\dot{v}$)= $\mathrm{sgn}\,\dot{\mathrm{p}}/\mathrm{sgn}\,\dot{\mathrm{v}}$ Further to avoid the use of divider we can write the RHS of eq(34) as $\mathrm{sgn}\,\dot{p}.\mathrm{sgn}\,\dot{v}$ as sign of RHS is the only information that we want.Thus now eq(33) can be written as

$$\mathrm{sgn}(\dot{v}) = \mathrm{sgn}\,\dot{p}.\mathrm{sgn}\,\dot{v} \qquad (35)$$

From the above control equation we can find the sign of $\dot{v}$. When sgn($\dot{v}$) is equal to +1 we have $\dot{v} \geq 0$ and when sgn($\dot{v}$) is equal to -1 we have $\dot{v} \geq 0$. So accordingly the voltage will increase or decrease but not settle at MPP as $\mathrm{sgn}(.)$ has a discontinuity at MPP.From this it is clear that here MPP is is not the equilibrium point rather a complex type of attractor.

3.3 Practical implementation of the control equation

Here the system consist of PV array connected to DC-DC buck converter, resistive load and low pass filter as shown in figure.17.

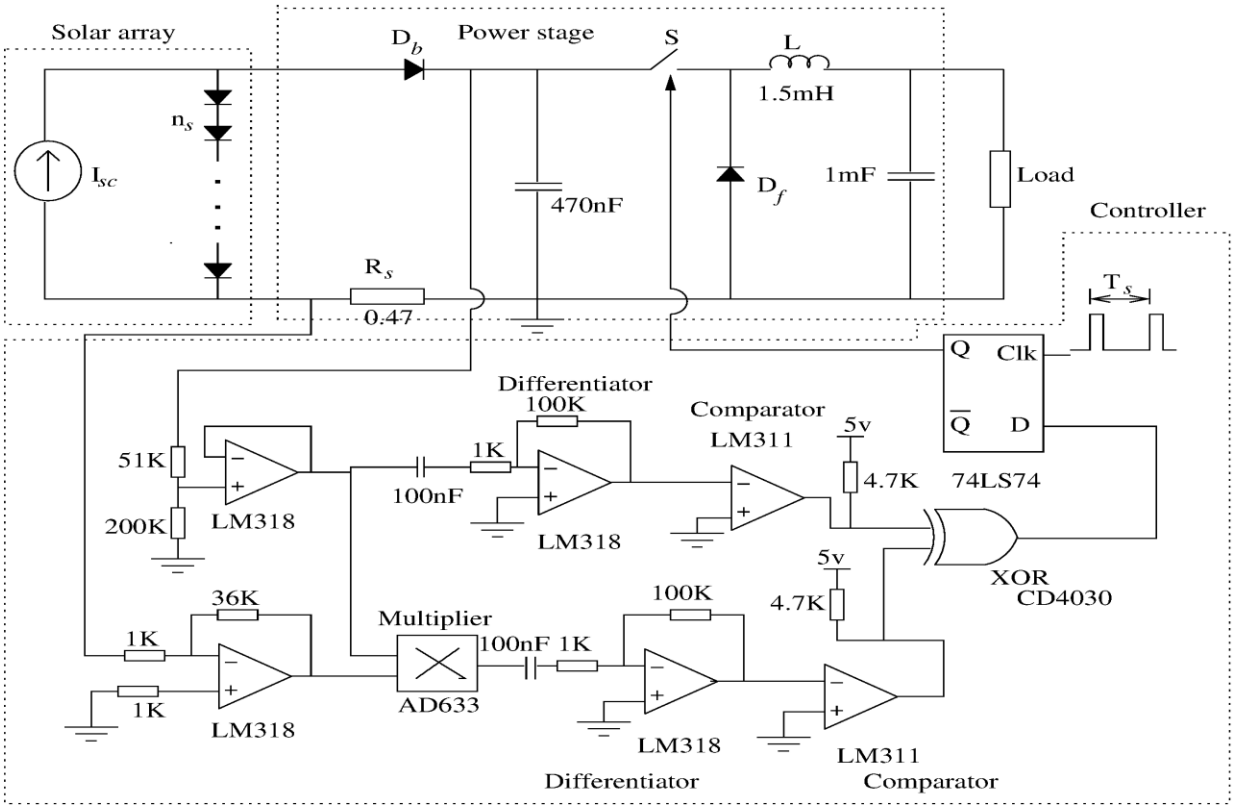

Fig. 16. Schematic diagram of proposed MPPT

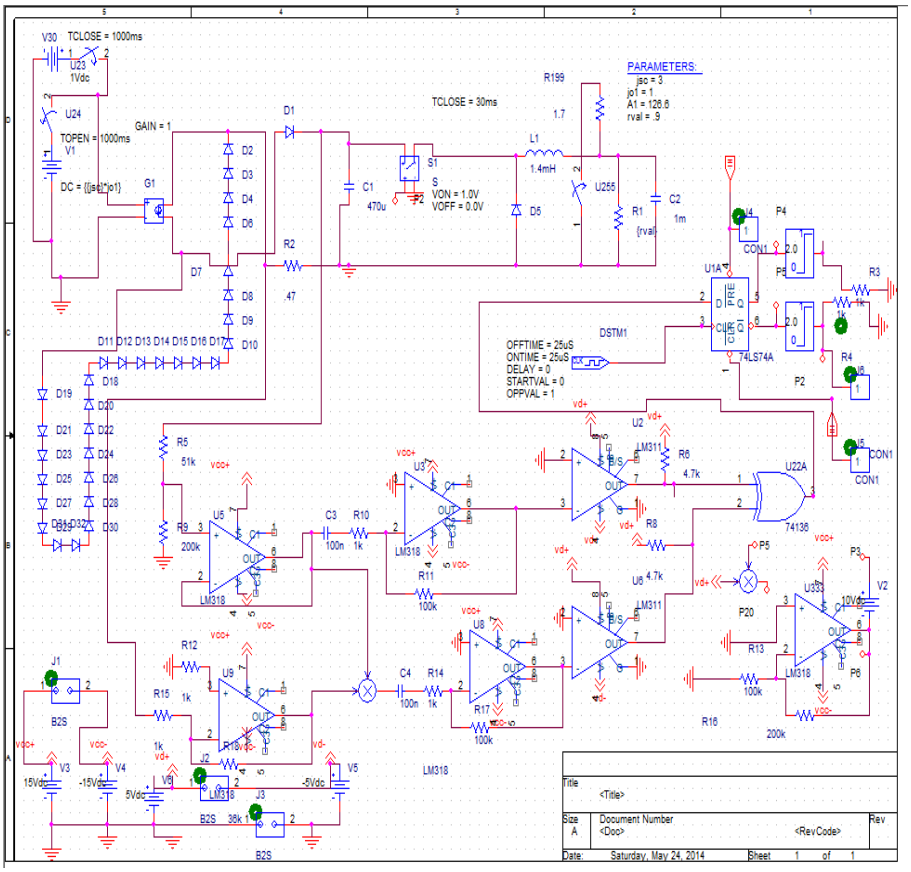

Fig. 17. Schematic diagram of proposed MPPT in PSPICE

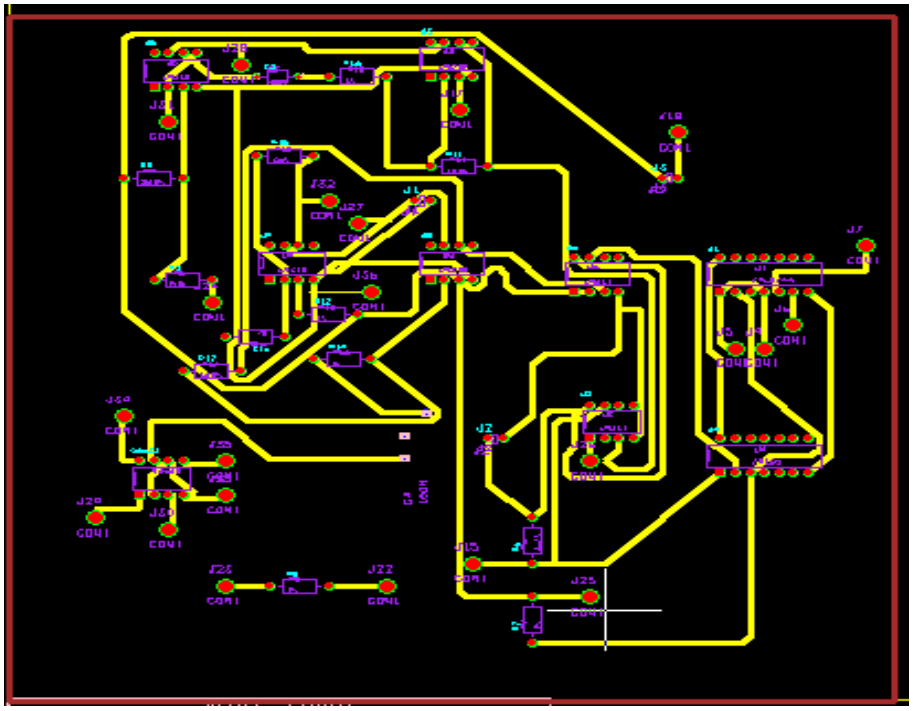

Fig. 18. Gerber file generated from PSICE for hardware realization

3.3.1. Implementation of RHS of the Control Equation

To implement the right hand side of the PV control equation we have to sense the PV array voltage and current.Then we gave to use multiplier to multiply *v* and *i* to find power.Then we have to find $\dot{v}$ and $\dot{p}$ using differentiator. The output of the two differentiator is given to two separate comparator. With the help of an exclusive-or gate (XOR) two signs can be multiplied which can expressed as Boolean. The XOR output gives a binary signal, showing whether v should be raised or reduced.

3.3.2. Implementation LHS of the Control Equation

In Fig. 17,when $\frac{\partial p}{\partial v} > 0$ we have to increase the PV array voltage to attain Vmpp which is done by opening the switch S of the buck converter.On the other when $\frac{\partial p}{\partial v} < 0$ we have to decrease the voltage to maintain Vmpp which is done by closing the switch S so the capacitor get discharged. The switch is open when the Q of D flip-flop has high value on the other hand the switch is closed when the output(Q) of flipflop is low.The output of the flipflop depends upon the input D which is connected to the output of XOR gate. So the opening and closing of switch S depends upon the output of XOR gate. Here output of XOR gate is connected to the flipflop clocked at constant frequency l/Ts for the following reason

(a) to avoid the high frequency chattering and

(b) to mitigate the impacts of interference produced by the switching action of the buck converter.

3.3.3. Operating principle of Controller

The overall operation of the controller is written in Table.1.There are two comparator in the controller.Each comparator has two state.So the combination of the output of two comparator has four state.The output of the comparator with $\dot{v}$ as input will be 1 when $\dot{v} > 0$ and output will be '0' when $\dot{v} \leq 0$.Similarly the output of the comparator with $\dot{p}$ as input will be '1' when $\dot{p}$>0 and output will be '0' when $\dot{p} \leq 0$.So depending upon $\dot{p}$ and $\dot{v}$ we have four condition that is(1) $\dot{p}$>0 and $\dot{v} > 0$ (2) $\dot{p} \leq 0$ and $\dot{v} \leq 0$ (3) $\dot{p}$>0 and $\dot{v} \leq 0$ (4) $\dot{p} \leq 0$ and $\dot{v} > 0$ which is shown in Table.1.Here when *v*<Vmpp switch is kept open so that the capacitor will get charged to increase the voltage.On the other hand when *v*>0 switch is kept close so that capacitor will get discharged to decrease the voltage.But it is impossible to stay at MPP exactly, because when *v* = Vmpp switch will be either open or close so the array voltage will increase or decrease little beat from that of Vmpp,so the voltage wanders around Vmpp.

Table.1 Principle f operation of controller

			Comparator output				
Condition	$\dot{p}$	$\dot{v}$	X_p	X_v	S	Switch	v
$V \leq V_{mpp}$	> 0	> 0	1	1	0	opens	increases
$V \leq V_{mpp}$	≤ 0	≤ 0	0	0	0	Opens	increases
$V > V_{mpp}$	> 0	≤ 0	1	0	1	closes	decreases
$V > V_{mpp}$	≤ 0	> 0	0	1	1	closes	Decreases

3.4. Pspice Result

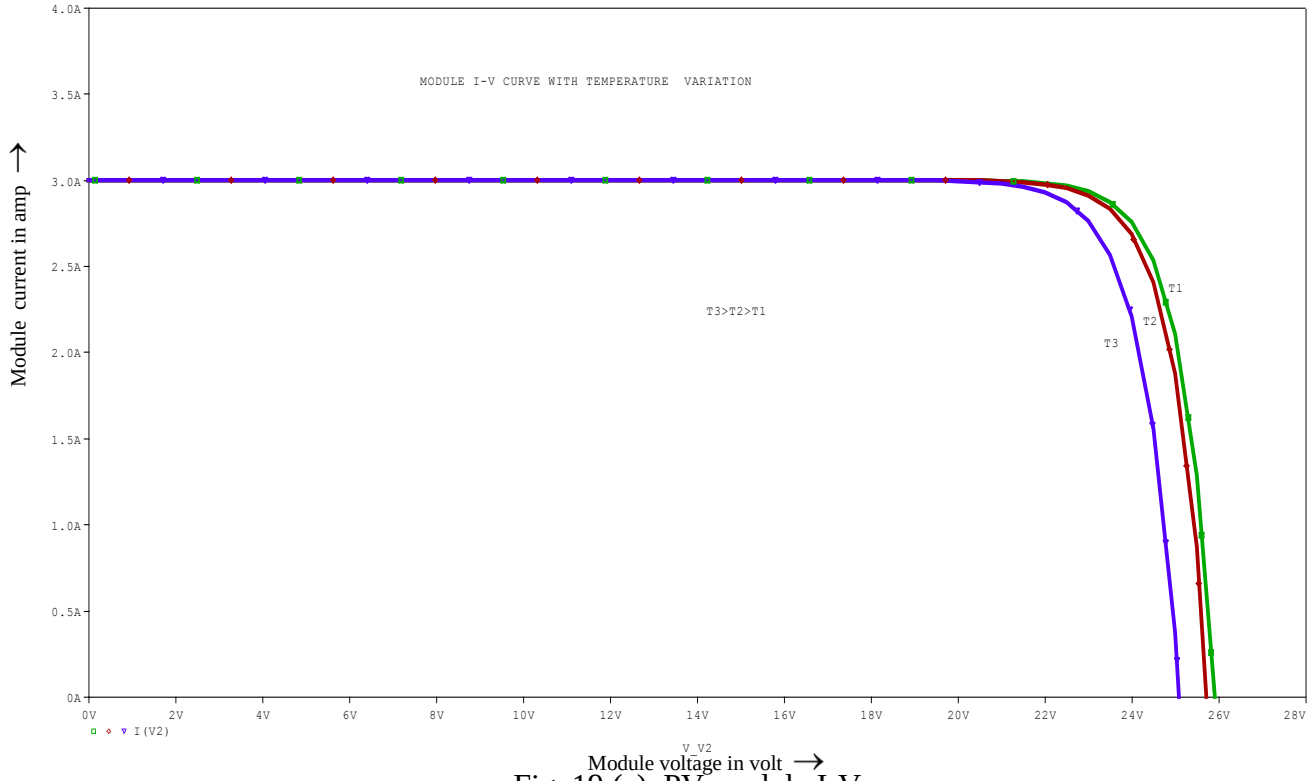

Fig. 19.(a). PV module I-V curve

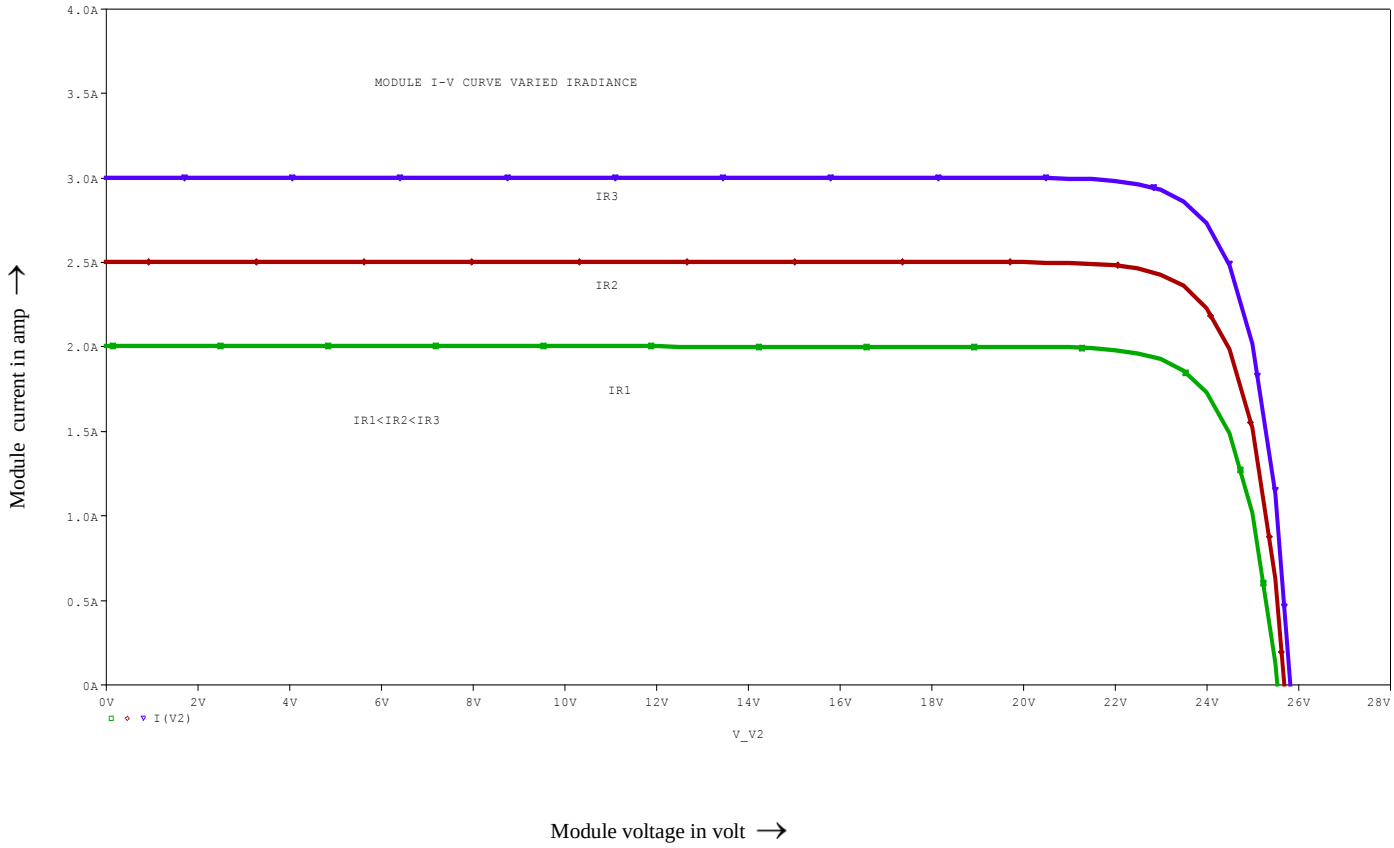

Fig. 19.(b). PV module I-V curve

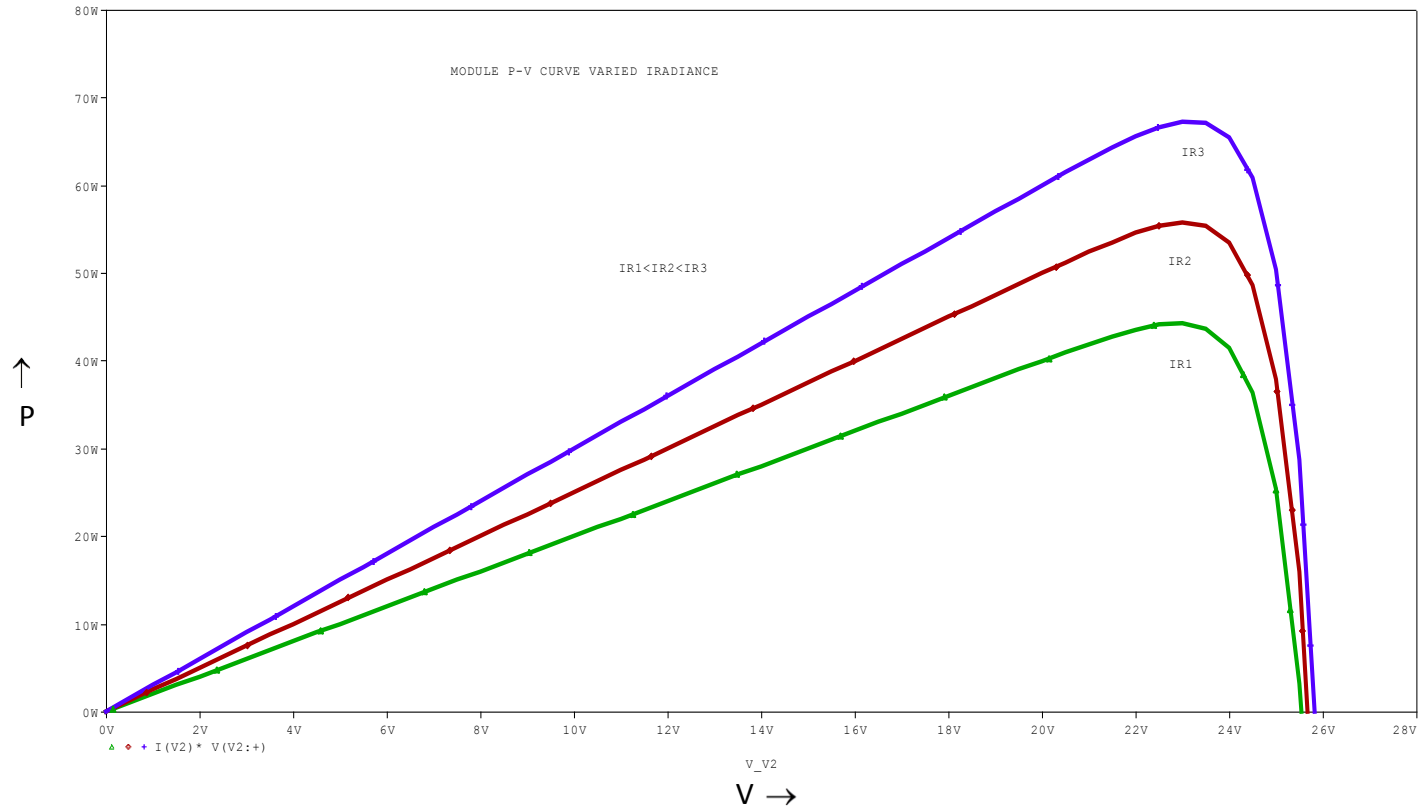

Fig. 20.(a). PV module P-V curve

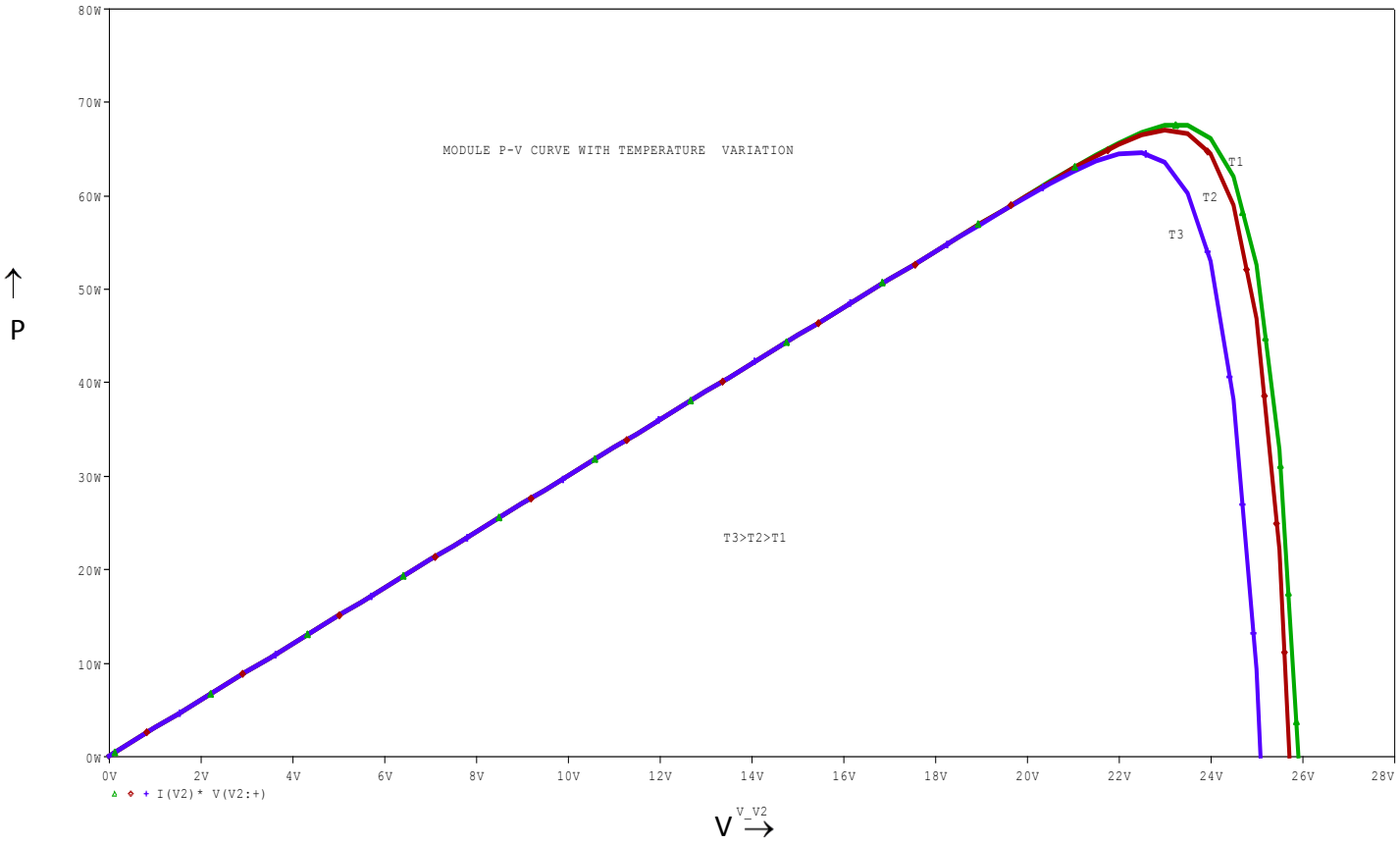

Fig. 20.(b). PV module P-V curve

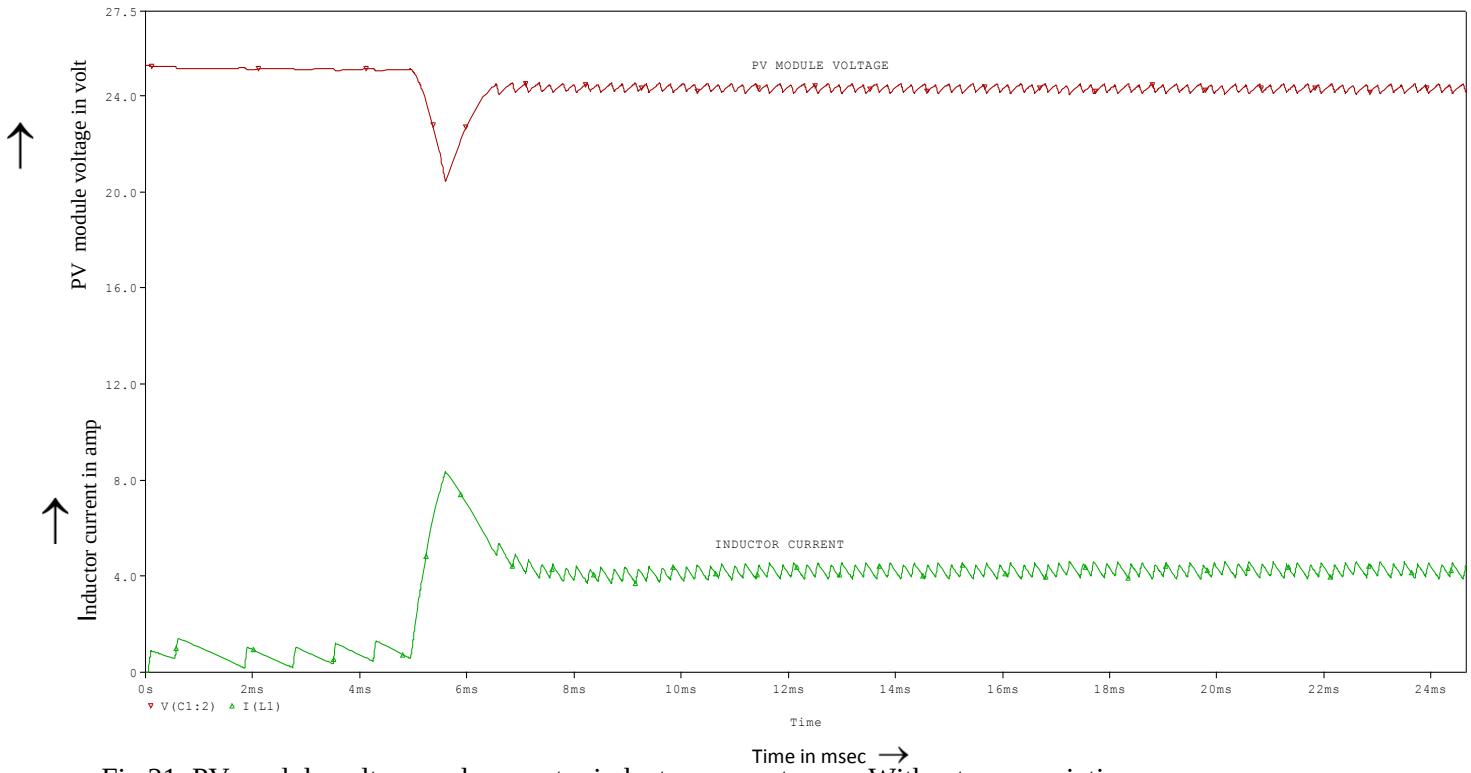

Fig.21. PV module voltage and converter inductor current curve Without any variation

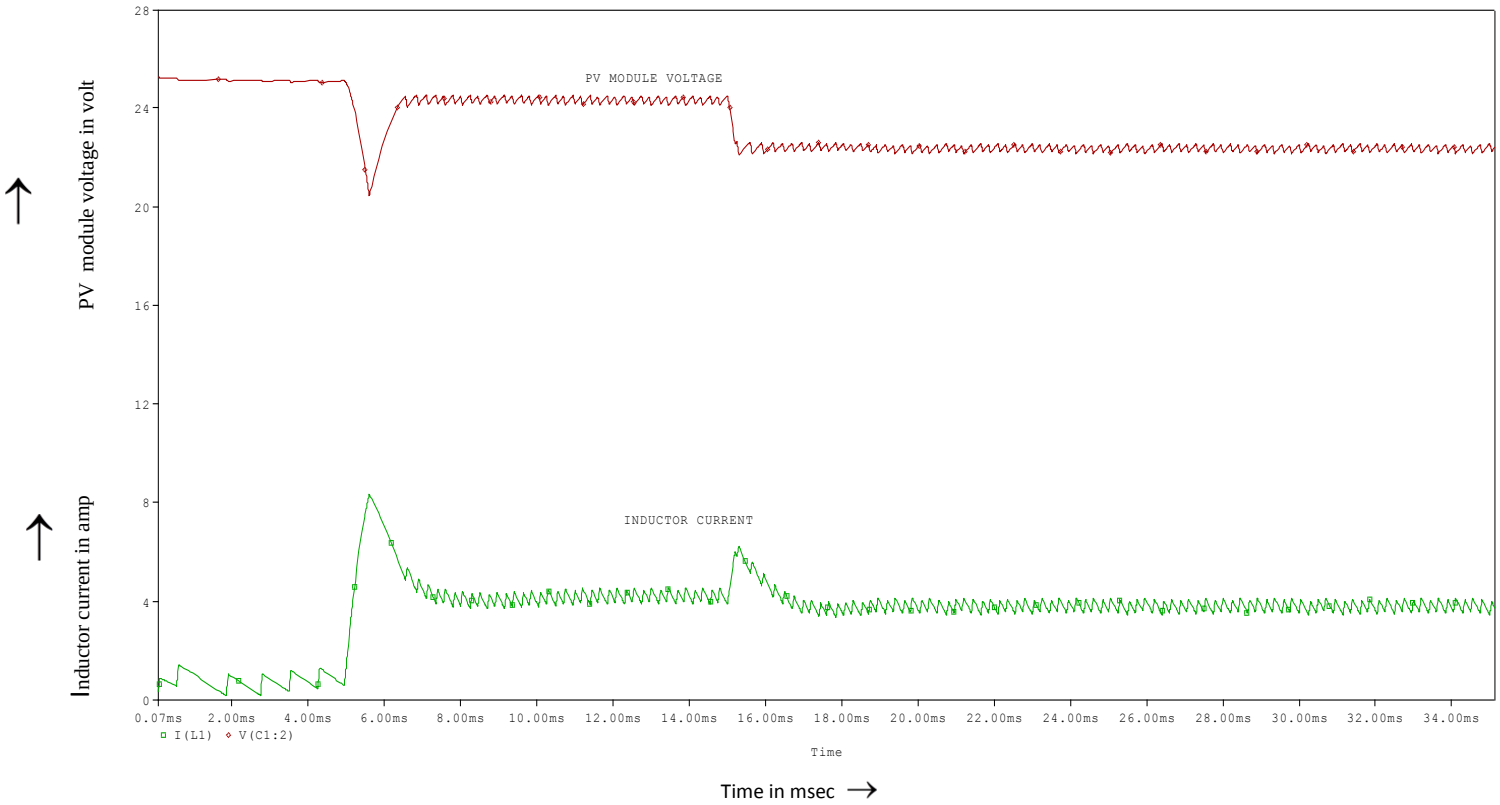

Fig.21.PV module voltage and converter inductor current curve With variation irradiation

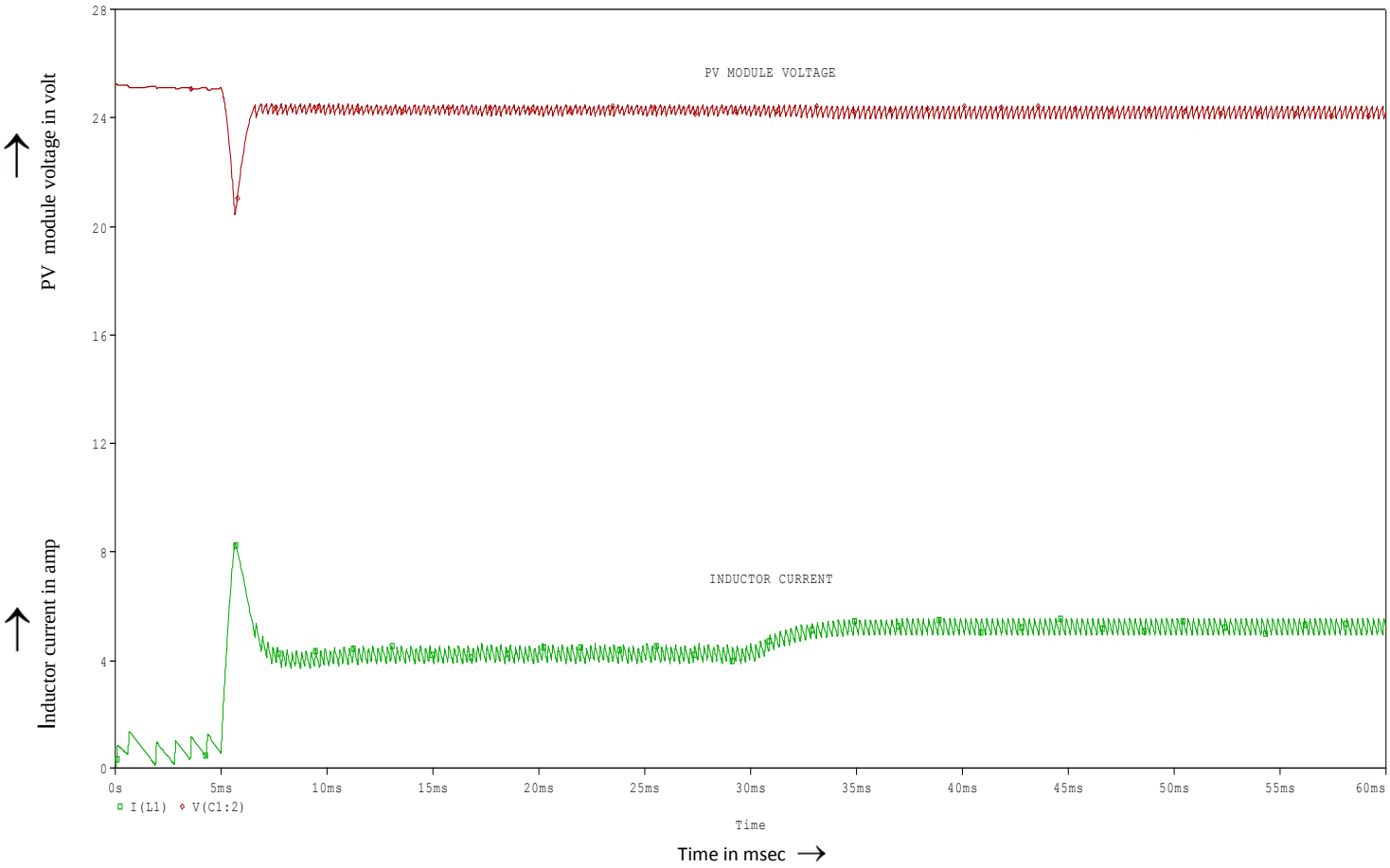

Fig 22.PV module voltage and converter inductor current curve With variation of load

3.5.Conclusion

In this work, a new MPPT technique was proposed which has a simple control method, derived from nonlinear dynamics theory. It gives an automatic maximum power point tracking method which does not require any information regarding the array characteristics. This controller has the simple structure which can be designed with the help of fewer commonly used electronics parts.

CHAPTER4

Conclusion

In this work, a FFSMC controller is proposed on the basis of Sliding Mode Control for a single phase full bridge VSI. Since SMC produces a huge chattering problem, so a hysteretic function is used to generate the switching law. A constant frequency operation of inverter is achieved by a simple flip-flop with the externally driven constant frequency clock pulse. A ellipsoidal swiching surface is derived in the phase plane. From the simulation results, it can be concluded that the proposed FFSMC controller not only give better voltage regulation, but also exhibits good dynamic performance under sudden load fluctuation. The total harmonic distortion of the inverter output voltage is 0.73% at the rated load. The voltage regulation of 0.8% is measured for step load change from zero to 100%. For the sake of simplicity, it have taken a dc voltage source as the inverter input supply. Moreover, this control scheme is also applicable to the islanded distribution generation (DG) system, powered by the the renewable energy sources like pv system, fuel cell system etc. The applications of this controller can also be extended to the grid connected. DG systems to mitigate the problems related to load fluctuation.Also the MPP of PV system is tracked successfully.

Future scope

This control scheme will be extended for grid connected inverter which is applicable for the real system. Also the MPP tracking methodology will be repeated for the BOOST converter as well as BUCK-BOOST converter.

REFERENCES

[1] Lasseter, Robert H, "Microgrids and distributed generation," Journal of Energy Engineering, vol. 133, no. 3, pp. 144–149, Dec. 2007.

[2] R. J. Wai, C. Y. Lin, Y. C. Huang, and Y. R. Chang, "Design of high performance stand-alone and grid- connected inverter for distributed generation applications," IEEE Transactions on industrial Electronics, vol. 60, no. 4, pp. 1542–1555, Apr. 2013.

[3] C. Trujillo, D. Velasco, G. Garcera, E. Figueres, and J. Guacaneme, "Reconfigurable control scheme for a pv micro inverter working in both grid connected and island modes," IEEE Transactions on industrial Electronics, vol. 60, no. 4, pp. 1582–1595, Apr. 2013.

[4] J. Y. Hung, W. Gao, and J. C. Hung, "Variable structure control: A survey," IEEE Transactions on industrial Electronics, vol. 40, no. 1, pp. 2–22, Feb. 1993.

[5] E. Fossas and A. Ras, "Second order sliding mode control of a buck converter," in Proc. 41st IEEE Conf. Decision Control, May 2002, pp.346–347.

[6] P. W. Lehn and M. R. Iravani, "Experimental evaluation of statcom closed loop dynamics," IEEE Transactions on Power delivery, vol. 13, no. 4, pp. 1378–1384, Oct. 1998.

[7] M. Marei, E. El-Saadany, and M. Salama, "A novel control algorithm for the dg interface to mitigate power quality problems," IEEE Transactions on Power delivery, vol. 19, no. 3, pp. 1384–1392, Jul. 2004.

[8] R. O. Caceres and I. Barbi, "A boost dc-ac converter:analysis,design and experimentation," IEEE Transactions on Power Electronics, vol. 14, no. 1, pp. 134–141, Jan.. 1999.

[9] P. Maussion, M. Grandpierre, J. Faucher, and J. C. Hapiot, "Instantaneous feedback control of a single-phase pwm inverter with nonlinear loads by sine wave tracking," in Proc. IEEE Int. Conf. Ind. Electron. Contr. Instrum. (IECON), 1989, pp. 130–135.

[10] P.K Sahu and S. Maity"Dynamic performance enhancement of voltage source inverter by constant-frequency hysteretic current controller," in Proc.IEEE techsym2014, pp. 1338–1343.

[11] P.K. Sahu, R.K. Mahakhuda, S Maity and S.K. Samal,"A fixed frequency sliding mode control for single-phase voltage source inverter", In proc. ICCPCT-2014 (IEEE conference), pp. 1006–1010.

[12] C. Rech, H. Pinheiro, H. A. Grundling, H. L. Hey, and J. R. Pinheiro, "A modified discrete control law for ups applications," IEEE Transactions on Power Electronics, vol. 18, no. 5, pp. 1138–1145, Sep. 2003.

[13] H. Sira-Ramirez, "Sliding motions in bilinear switched networks," IEEE Transactions on Circuits and Syst., no. 8, pp. 919–933, 1987.

[14] S. C. Tan, Y. M. Lai, C. K. Tse, L. M. Salamero, and C. K. Wu, "A fast response sliding-mode controller for boost-type converters with a wide range of operating conditions," IEEE Transactions on industrial Electronics, vol. 54, no. 6, pp. 3276–3286, Dec. 2007.

[15] S. Maity and Y. Suraj, "Analysis and modeling of a FFHC-controlled dc-dc buck converter suitable for wide range of operating conditions," IEEE Transactions on Power Electronics, vol. 27, no. 12, pp. 4914–4924, Dec. 2012.

[16] V. I. Utkin, Sliding Modes and Their Application in Variable Structure Systems. MIR, 1978.

[17] M. Carpita and M. Marchesoni, "Experimental study of a power conditioning using sliding mode control," IEEE Transactions on Power Electronics, vol. 11, no. 5, pp. 731–742, 1996.

[18] B. Nicolas, M. Fadel, and Y. Chron, “Sliding mode control of dc-to-dc converters with input filter based on the lyapunov-function approach,” in Proc. Eur. Power Electron. Conf. (EPE), 1995, pp. 1338–1343.
[19] J. M. Ruiz, S. Lorenzo, I. Lobo, and J. Amigo, “Minimal ups structure with sliding mode control and adaptative hysteresis band,” in Proc. Int. Conf. Ind. Electron. Contr. Instrum. (IECON), 1990, pp. 1063–1067.
[20] C. Chiarelli, L. Malesani, S. Pirondini, and P. Tomasin, “Single-phase, three level, constant frequency current reference hysteresis control for ups applications,” in Proc. Eur. Power Electron. Conf. (EPE), 1993, pp. 180–185.
[21] L. Malesani, L. Rossetto, [21]G. Spiazzi, and A. Zuccato, “An ac power supply with sliding-mode control,” IEEE Ind. Appl. Mag., pp. 32–38, 1996.
[22] J. F. Silva and S. S. Paulo, “Fixed frequency sliding modulator for current mode pwm inverters,” in Proc. Power Electron. Spec. Conf. (PESC), 1993, pp. 623–629.
[23] B. Nicolas, M. Fadel, and Y. Chron, “Fixed-frequency sliding mode control of a single-phase voltage source with input filter,” in Proc. IEEE Int. Symp. Ind. Electron. (ISIE), 1996, pp. 470–475.
[24] H. Pinheiro, A. S. Martins, and J. R. Pinheiro, “A sliding mode controller in single phase voltage source inverters,” in Proc. Int. Conf. Ind. Electron. Contr. Instrum. (IECON), 1994, pp. 394–398.
[25] Y. W. Li, D. M. Vilathgamuwa, and P. C. Loh, “A grid-interfacing power quality compansator for three-phase three-wire microgrid applications,” IEEE Transactions on Power Electronics, vol. 21, no. 4, pp. 1021–1031, July 2006.
[26] Y. H. Lim, D. C. Hamill , "Synthesis, simulation and experimental verification of a maximum power point tracker from nonlinear dynamics," Power Electronics Specialists Conference, 2001. PESC. 2001 IEEE 32nd Annual , vol.1, no., pp.199,204 vol. 1, 2001