# Power Factor Improvement of single phase AC-DC system using Parallel Boost Converter

A THESIS

SUBMITTED IN PARTIAL FULFILLMENT OF THE

REQUIREMENTS FOR THE DEGREE OF

**BACHELOR OF TECHNOLOGY**
**IN**
**ELECTRICAL ENGINEERING**

By:

**ABHISHEK GIRI**

**ROLL NO: 111EE0243**

Under the guidance of:

**Prof. A. K. PANDA**

**HOD, Department of Electrical Engineering**

**Department of Electrical Engineering**

**National Institute of Technology**

**Rourkela-769008**

**May, 2015**

DEPARTMENT OF ELECTRICAL ENGINEERING
NATIONAL INSTITUTE OF TECHNOLOGY, ROURKELA

# CERTIFICATE

This is to certify that the thesis entitled "**Power Factor improvement of single phase AC-DC system using Parallel Boost Converter**", submitted by **Abhishek Giri (Roll. No. 111EE0243)** in partial fulfilment of the requirements for the award of **Bachelor of Technology** in **Electrical Engineering** during session 2014-2015 at National Institute of Technology, Rourkela is a bona fide record of research work carried out by them under my supervision and guidance. The candidate has fulfilled all the prescribed requirements. The Thesis which is based on candidate's own work has not been submitted elsewhere for a degree/diploma. In my opinion, the thesis is of standard required for the award of a bachelor of technology degree in Electrical Engineering.

**Place: Rourkela**

**Dept. of Electrical Engineering**
**National Institute of Technology**
**Rourkela-769008**

**Prof. A.K. Panda,**
**Prof. & HOD,**
**Dept. Of Electrical Engg.**

# ACKNOWLEDGEMENTS

I want to express my sincere gratitude and thanks to my esteemed, honourable guide **Prof. A K Panda**, **Head of Department**, **Department of Electrical Engineering** on the submission of my thesis report of "**Power Factor Improvement of Single Phase AC-DC system using Parallel Boost Converters**". I express gratitude towards him from the center of my heart for his consistent inspiration and encouragement over the span of my work in the most recent one year. I really acknowledge and esteem his regarded direction and consolation from the earliest starting point to the end of this thesis. I am obliged to him for having helped me shape the issue and giving experiences towards the arrangement.

I am appreciative to all the research facility staff and regulatory staff of our specialty for their convenient help.

I might want to pass on my gratitude to all, who bolstered and helped me in finishing my thesis in time.

Furthermore, finally this thesis would not have seen the light of the day on the off chance that I would not have got the interminable good backing from my parents, companions and the Almighty God. I might want to say thanks to all of them

Abhishek Giri

Roll no: 111EE0243

# ABSTRACT

The advent of controller integrated circuits has forced the development of new power factor correction techniques. A vast range of PFC circuits have been proposed with diverse operating modes to tackle the situation. These PFC circuits adjust the waveforms of the current in the input side so that maximum power can be tapped from the supplies. For every equipment the load should try to match a resistive one as closely as possible, only then the PF will be near to unity as there will be reduction of reactive power in the circuit. The current in this situation is free from all the lower as well as higher order harmonics thus copies the input voltage waveform or in other words it becomes in phase with it. So, this causes the current in the circuit to be at the lowest possible value to do the same work. As a result, the losses associated with circuit are reduced greatly. Hence the consumption in power is reduced greatly. This causes the price of distribution as well as generation to be lowered and hence improvement in the process. Since there are very less harmonics so the chances of interference with telecommunication devices are exponentially reduced. The strict regulatory enforcements has played a pivotal role in paving the way for these PFC circuits. Boost converter accomplishes this Active power-factor correction (ACMC) in discontinuous as well as in continuous modes. A good degree of accuracy is maintained in tracking the current program by average current. At first a simulation of single bridge converter without using any converter is performed. Then a current control circuit and a voltage control circuit were added to the boost converter which improved the input THD. Finally, the project concentrates on increasing the power factor by connecting two boost converters in parallel. In this method the current in one circuit has to keep up with the one in parallel to it. The boost converter of one circuit is phase shifted with respect to its counterpart parallel circuit. The harmonics in current of supply and due to switching are reduced drastically by the help PI controller and EMI filter respectively.

# CONTENTS:


Abstract 3

Contents 4

List of Figures 5

List of Tables 7

1. ***Introduction***

1.1 Mathematical description of power factor 11

1.2 Power Factor and Total Harmonic Distortion 12

1.3 Effects of nonlinear loads 14

1.4 Standards for line current harmonics 15

2. ***Power Factor Correction***

2.1 Passive Power Factor Correction 18

2.2 Active Power Factor Correction 20

3. ***AC Modelling Approach***

3.1 Boost converter AC modelling 23

3.2 Transfer Function of Boost Converter 30

4. ***Conventional Control Scheme for PFC Boost Converter***

4.1 Peak Current Control Method 33

4.3Average Current Control Method 35

5. ***Parallel Connection of two Boost Converters***

5.1 Parallel Connection 38

5.2 Dual Boost PFC Modelling 38

5.3 The Control Strategy 40

6. ***EMI Filter***

6.1 EMI Input Filter 43

6.2 Simulation Results and calculations 45

7. Conclusion 52

References 53

# LIST OF FIGURES

1. fig. 1 Block diagram regarding AC – DC system. 9
2. fig. 2 Graph between PF vs. THD (%) 14
3. fig. 3 Rectifier circuit using inductive input filter 19
4. fig. 4 Rectifier circuit using resonant input filter 20
5. fig. 5 Block diagram for active PFC technique 21
6. fig. 6 Different types of 1 phase PFC topologies 21
7. fig. 7 Boost converter circuit diagram 25
8. fig. 8 Boost converter inductor voltage and current waveforms 25
9. fig. 9 Boost converter capacitor current and voltage waveforms 26
10. fig. 10 equivalent circuit of small signal ac inductor loop 29
11. fig. 11 equivalent circuit of small signal ac capacitor node equation 29
12. fig. 12 small signal ac equivalent circuit of boost converter 29
13. fig. 13 Peak current control scheme 34
14. fig. 14 Average current control scheme 35
15. fig. 15 Dual Boost Power Factor Correction Circuit 38
16. fig. 16 Input currents of two interleaved PFC circuits 41
17. fig. 17 Input currents of two interleaved PFC circuits for ideal condition 41
18. fig. 18 Input currents of two interleaved PFC circuits based on internal active filter approach 41
19. fig. 19 Attenuation of differential mode EMI a.) Schematic b.) Phasor Diagram 44
20. fig. 20 Thevenin equivalent circuit of power stage and filter combined. 44
21. fig. 21 Simulink block for a rectifier circuit without PFC without PFC. 45
22. fig. 22 plot of input voltage and input current vs time for a rectifier circuit without PFC circuit 46
23. fig. 23 Simulink block for a rectifier circuit with boost converter 46
24. fig. 24 Plot of input current vs. time for a rectifier circuit with boost converter as PFC circuit using ACMC method 47

25. fig. 25 Plot of input voltage and input current vs. time for a rectifier circuit with boost converter as PFC circuit using ACMC method. 47

26. fig. 26 Line current harmonics for a rectifier circuit with boost converter as PFC circuit using ACMC method. 47

27. fig. 27 Output voltage for a rectifier circuit with boost converter as PFC circuit using ACMC method. 48

28. fig. 28 Simulink block for a rectifier circuit with parallel boost converter as PFC circuit 49

29. fig. 29 Plot of input current vs. time for a rectifier circuit with parallel boost converter as PFC circuit 49

30. fig. 30 Plot of input voltage and input current vs. time for a rectifier circuit with parallel boost converter as PFC circuit 49

31. fig. 31 Line current harmonics for a rectifier circuit with parallel boost converter as PFC circuit. 50

32. fig. 32 Output voltage for a rectifier circuit with parallel boost converter as PFC circuit. 50

# LIST OF TABLES

1 Table 1 Power Factor versus THD (in %) 13

***Introduction***

***Mathematical description of power factor***

***Power Factor and Total Harmonic Distortion***

***Effects of nonlinear loads***

***Standards for line current harmonics***

## 1. INTRODUCTION

The various applications of AC-DC converters are adjustable speed drives, UPS, Switched Mode Power Systems (SMPS) etc. Diode rectifiers are used at the input of many Power Electronic devices connected to AC utility mains. Diode rectifier is of non-linear nature and this causes significant harmonics in line current, thus they cause degradation of power quality, increase the losses in the devices. So, strict international standards have been enforced. So, circuits reducing the harmonics are integrated in PE system. Previously inductors and capacitors which were costly and bulky were implemented for this purpose since they effectively removed harmonics. Active power line conditioners (APLC) which are used to reduce harmonics are hard switched, and this result in low efficiency, stress and low EMI etc. Resonant converters which are soft switched are operated in mode of variable frequency and thus components should be modelled with lowest operating frequency. Boost converter topology in continues conduction mode (CCM) is used in medium power AC/DC converter, because it gives a power factor as close as unity in the input side of AC terminals.

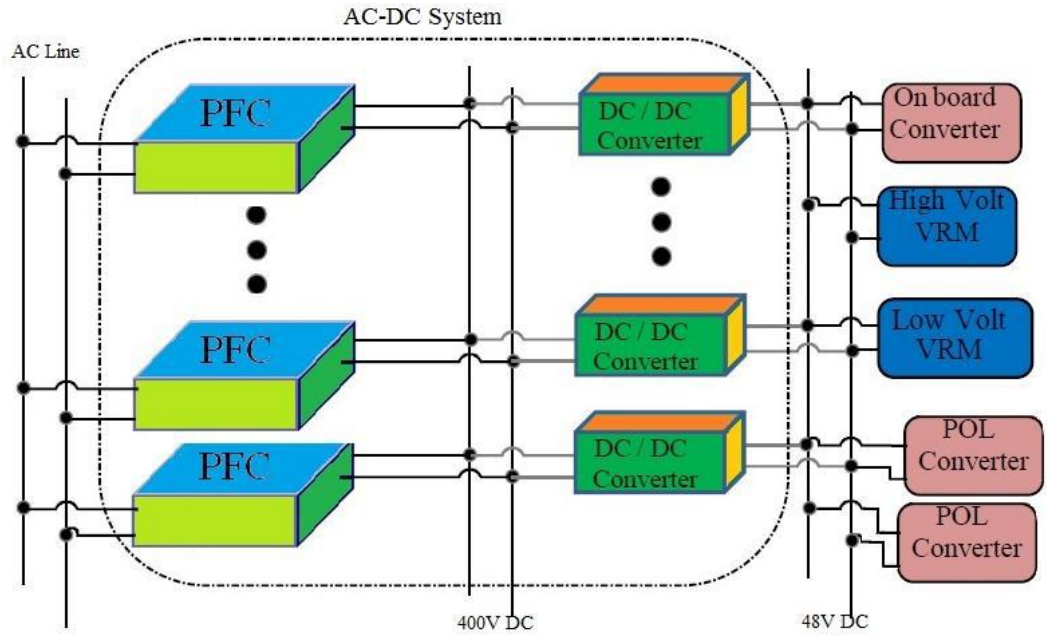


Fig.1 Block diagram regarding AC – DC system.

The power which is delivered to the converter from the AC lines is product of root mean square values of current and voltage signals. This power known as apparent power, is the input to the converter.

$$P_A = V_{rms} I_{rms}$$

Real Power, whereas is obtained by multiplying instantaneous current and voltage and then averaging the product

$$P_R = \frac{1}{T} \int v\,(\,t\,)\; i\,(\,t\,)\; dt$$

Where

$v\,(\,t\,)$ =Instantaneous voltage signal

$i\,(\,t\,)$ = Instantaneous current signal

The advantages of high power factors are:

- For the AC rating being the same, most of the usable power can be extracted by the load through converter.
- Losses due to harmonics of the line reactive components such as Reactors, motors, transformers and capacitors etc. are dropped drastically.
- There is also a drop in the noise pollution which are absorbed and radiated by this devices.

It is requisite to adjust the deformed current waveform of fig to obtain maximum power factor. There are mainly two methods to adjust the current waveform. They are active and passive power factor correction. In passive PFC circuit we have the elements which are passive in nature, as indicated by the name. These elements adjust the waveform of the current by filtering the unwanted harmonics. These passive networks are excellent in improving the power factor of the converters but they come at the expense of increased size and weight of the passive elements. However their relative simplicity balances against their disadvantages.

The active power factor correction circuits are better substitutes of the passive ones in adjusting the current waveform. They comprise of power converters of operating in much higher than that used in AC line. There is a drastic drop in the weight and size of the reactive elements used in active PFC circuits than in those used in the passive PFC circuits.

## 1.1 MATHEMATICAL DESCRIPTION OF POWER FACTOR

In this chapter the power factor has been worked out for:

- for pure sinusoidal voltage and current
- for distorted sinusoidal voltage and current

And a relationship between power factor and THD has been obtained.

### 1.1.1 Power Factor for pure sinusoidal voltage and current.

Power Factor as described earlier gives relationship between the apparent power obtained from source and real power delivered to load. Mathematically we can describe it as a ratio between active power to total and apparent power.

$$PF = \frac{P_R}{P_A}$$

where $P_R$ = Real Power and $P_R$ = Apparent Power

For pure sinusoidal voltage and current signal

Let $v\ (\ t\ )$ and $i\ (\ t\ )$ be the voltage and current associated with the line:

$$v\ (\ t\ ) = \mathrm{a}\sin(\ wt\ )\quad and\ \ i(t) = b\sin(\ wt + \theta)$$

Using the equation the real power is

$$P_R = \frac{\omega}{2\pi}\int_0^{2\pi} ab\ sin(wt)\sin(wt + \theta)\ dt = \frac{1}{2}ab\ cos\theta$$

Using the equation the apparent power is

$$P_A = \frac{a}{\sqrt{2}} \times \frac{b}{\sqrt{2}} = \frac{ab}{2}$$

From the equation we obtain

$$pf = cos\theta$$

### 1.1.2. Power Factor for distorted sinusoidal voltage and current

The PF in this case is derived assuming that *v (t)* is free from all distortions. So, by using the equation

$$pf = \frac{\frac{1}{T}\int_0^T v(t)i(t)dt}{V_{rms}I_{rms}} = \frac{\frac{a}{\sqrt{2}}\frac{b}{\sqrt{2}}cos\theta}{\frac{aI_{rms}}{\sqrt{2}}}$$

Now using $\frac{b}{\sqrt{2}} = I_1 =$ rms value fundamental component of *i (t)*, we obtain

$$PF = \frac{I_1}{I_{rms}}cos\theta$$

### 1.2 Power Factor and Total Harmonic Distortion:

The total harmonic distortion of the current is the ratio of sum of rms values of harmonics of the current to the root mean square value of the fundamental component of current.

$$THD = \frac{[\sum_{n=2}^{\infty} I_{nrms}^2]^{0.5}}{I_1}$$

So,

$$\frac{I_1}{I_{rms}} = \frac{1}{\sqrt{1 + THD^2}} = K_p$$

Where $K_p$ is distortion factor.

So, expression for power factor becomes:

$$PF = K_p cos\theta$$

The table is computed from the equation---. The table determines power factor versus percentage of total harmonic distortion. The data in the table shows that if the PF is less than 0.7, the rms value of all the harmonics combined together is more than rms value of the fundamental. This shows that efficiency will be less than 50% due the fact that power is delivered only at fundamental frequency.

**TABLE 1**

**Power Factor versus Percentage of THD**

$(\boldsymbol{\theta = 0, cos\theta = 1})$

| **Power Factor** | **THD(in percentage)** |
|---|---|
| 0.5 | 174.21% |
| 0.7 | 102.12% |
| 0.9 | 48.53% |
| 0.96 | 29.36% |
| 0.98 | 20.41% |
| 0.992 | 12.53% |
| 0.995 | 10.34% |
| 0.997 | 7.78% |
| 0.999 | 4.58% |
| 0.9992 | 4.40% |
| 0.9996 | 2.73% |
| 1 | 0.00% |

**Power Factor versus Percentage of THD**

$(\boldsymbol{\theta = 0, cos\theta = 1})$

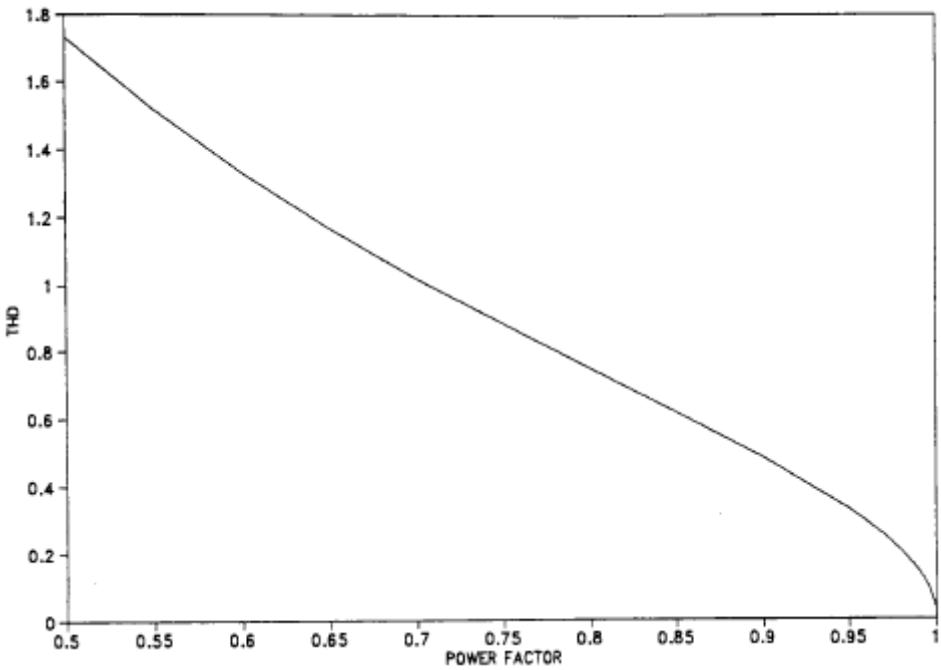


Fig. 2 Graph between PF vs. THD (%)

## 1.3 EFFECTS OF NON LINEAR LOADS:

The day to day equipments on rectification give non-sinusoidal line current because the rectifiers have nonlinear characteristics.

In maximum situations the percentage of harmonics are found to be greater than that of the fundamental. The issues related with these nonlinear loads are:

- It may cause untimely setbacks in transformers, insulators, AC machines and Switchgear due to excessive heating and loss.
- It may result in over current in neutral wire.
- It drastically hampers the power factor and thereby leading to more consumption of energy.
- There may be overshoots in voltages due to resonance.
- The harmonics generated from these loads are seen to interfere with telecommunication systems

- There can be errors in metering instrument.
- These harmonics are the main sources of noise coming from the machines.
- In induction motors these are the root causes of cogging and crawling.

## 1.4 STANDARDS FOR LINE CURRENT HARMONICS:

### 1.4.1 STANDARD IEC 1000-3-2:

1. The standard takes into consideration those instruments whose current rate up to. It applies 16A per phase and at the same time it should be connected to 50Hz / 60 Hz, 220-240Vrms for one phase system or 380-415Vrms for three- phase system.

2. There are four classifications of the electrical equipment according to this standard are A, B, C, and D.

3. Leaving out the lighting devices, the standard is not applied equipments which have rated power lesser than 75W

CLASS-A:
Those instruments only come under class A which are not mentioned in any other classes.

CLASS-B:
Class B includes all those instruments which are portable i.e. arc welders which are amateur in nature.

CLASS-C:
Excluding the dimmers all the other instruments which are used for lighting purposes fall in class C.

CLASS-D:
The main instruments which fall under this class are PC, monitors, TV sets.

### 1.4.2 STANDARD IEEE 519-1992:

It encourages practices to control harmonics in power system for individual consumers as well as utilities. The harmonics associated with line current are marked as percentage of maximum demand of load current $I_L$. With the decrease of $\frac{I_{sc}}{I_L}$ it also decreases, which implies that grids which are weak have lower limits. It also encircles loads with high voltage and high power.

# ***Power Factor Correction***

## *Passive Power Factor Correction*

## *Active Power Factor Correction*

## 2 .1 PASSIVE POWER FACTOR CORRECTION

The networks associated with passive power factor correction use passive filters to alter the input line current. The two most common methods for passive power factor correction is by using:

- Inductive input filter
- Resonant input filter

### 2.1.1 INDUCTIVE INPUT FILTER:

As shown in the figure, the inductive input filter is different from capacitive input filter as there is an additional inductor in it. In capacitive input filter voltage across capacitor is charged to maximum input voltage. But in inductive filter the rectified voltage is averaged over half the period of source voltage i.e. $\pi/\omega$ . The amount of power factor correction done by inductive input filter depends on the value of the inductor, *L* and the value of the filter load *R*. The function of the inductor is to act as energy storing element and fill the sections which are discontinuous in the current pulses and thus help in giving a continuous waveform. But this method cannot give a unity power factor because the inductor current can never be in phase with the voltage waveform. Even if an infinite inductance is take without regarding the magnitude of the source voltage, the current through inductor will not be in phase with voltage waveform.

The inductive input filter works in modes i.e. continuous conduction mode (CCM) and discontinuous conduction mode (DCM). The time for conduction by the current flowing through inductor is directly proportional to the inductor value. If the induction value is more, then the time for conduction by the inductor current will be more and if the inductance is less, then the time will be lesser. The inductor current will become zero and hence be continuous for a particular value of resistance R. In almost all the cases the inductive input filter is modelled to operate in continuous current mode.

The ac ripple voltage should be ignored to calculate the output voltage of the capacitor and thus find out the average voltage. Actually the filter time constant is many times larger than time constant of frequency of the full wave rectified voltage which is $\pi/\omega$.

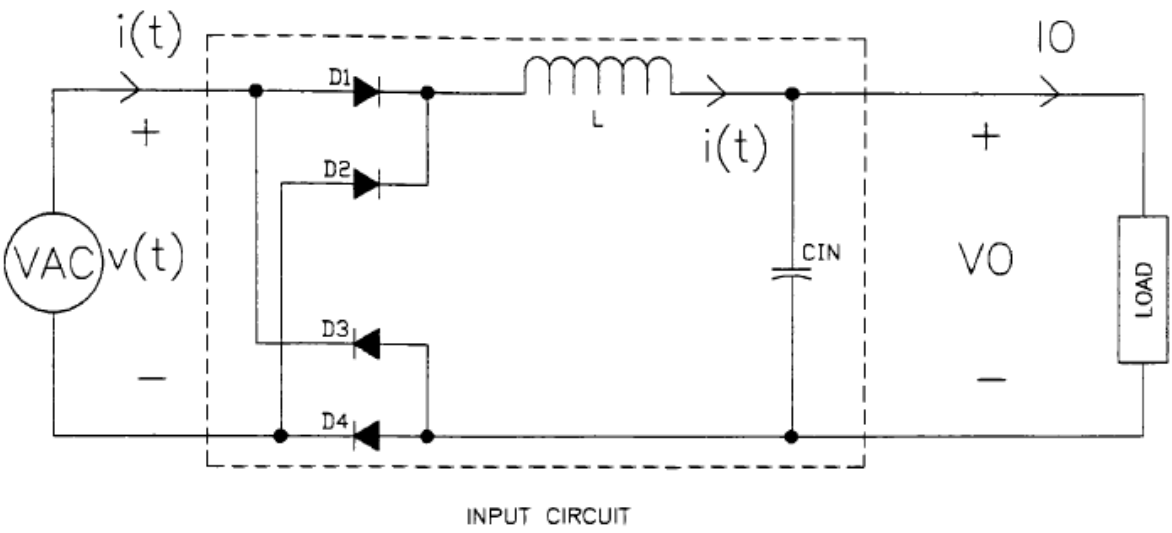


Fig.3 Rectifier circuit using inductive input filter

### 2.1.2 RESONANT INPUT FILTER:

In this filter model, as shown in figure between the input line and bridge rectifier there is a series inductor/capacitor. A series resonant network is created by the inductor/capacitor. This series resonant network forces the current to flow only at filter resonance frequency. The maximum current flows in circuit only when inductive reactance equals to the capacitive reactance and this is achieved only when frequency of the filter is equal to resonant frequency. In the ideal case the DC resistance is taken as zero and hence the input current becomes a scalar multiple of voltage.

The resonant frequency and the characteristic impedance define the resonant input filter, given by the expressions:

$$\omega_R = \frac{1}{\sqrt{LC}}$$

and

$$Z_R = \sqrt{\frac{L}{C}}$$

To get maximum power factor the input line frequency and the resonant frequency are both made same.

$$\omega_R = \omega$$

Again we have to ignore the bulk storage capacitor's ac ripple component. The output DC voltage of the storage capacitor gives a DC current in load designed as *R*.

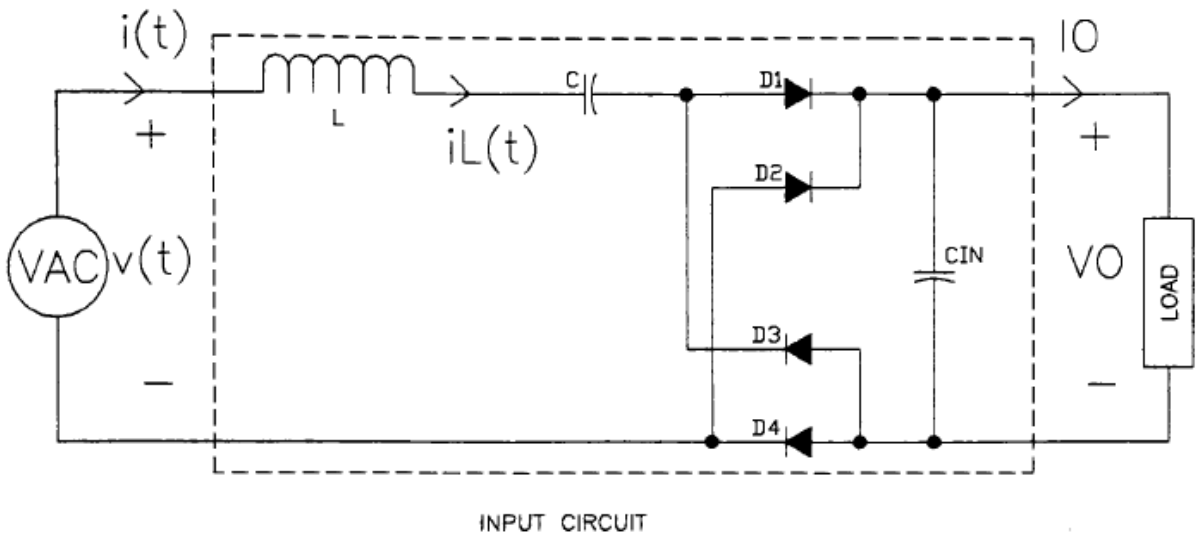


Fig.3 Rectifier circuit using resonant input filter

## 2.2 ACTIVE POWER FACTOR CORRECTION

Besides using passive networks, active power conversion circuits can be employed as PF correction converters. Passive pfc networks filter and shape the current waveform to remove the unwanted harmonics. The active pfc converter accomplish the same by modulating the current extracted from the power line at the switching frequency of the converter. The converter is placed between the capacitive input filter and the power line to shape the line current into a more desirable waveform. Compared to the passive pfc networks, the pfc converter can achieve the same or higher PF with much lower inductance value. The consequence of high frequency input current modulation effectively multiplies the actual inductor value in the convertor reflected into the AC line. Of the four converter topologies, the Boost Converter is most used

as pfc converter. However all four switching converter topology can be designed to extent control over its average input current waveform. Comparing the four topologies, the Buck Converter has the disadvantage of requiring an additional input filter to remove the switching frequency component from its pulsating input current. However since typically the switching frequency is many orders of magnitude higher

then the AC line frequency, the requirement of the additional input filter is still much reduced when compared to the passive networks.When in CC mode, the input current waveforms for the Boost, Buck-Boost and Cuk converters are non-pulsating. Therefore, unlike the Buck Converter, an extra filter is not needed to smooth the switching frequency component for the Boost, Buck-Boost and Cuk converters. The Buck-Boost or Flyback Converter is mostly use in low power applications and is not well suited for high power applications where PF correction is most needed and used. For the Cuk converter, the stringent requirement for the series energy transferring capacitor at high power applications makes it undesirable.

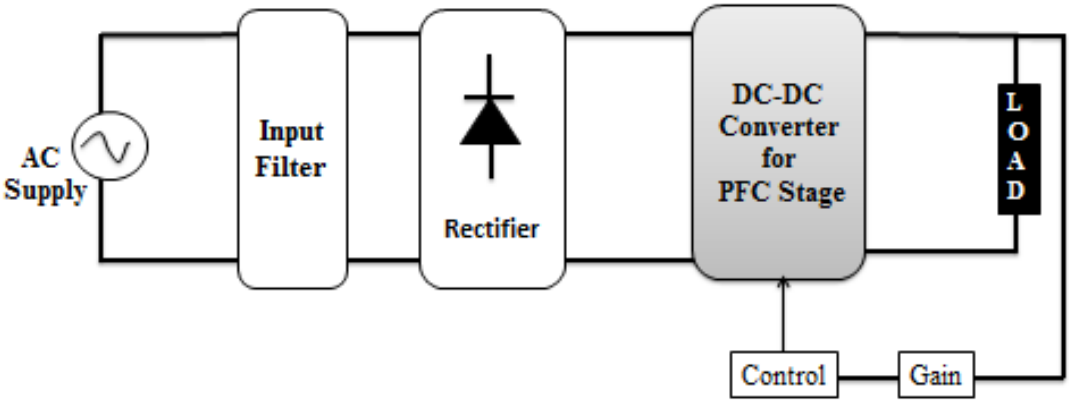


Fig.5 Block diagram for active PFC technique

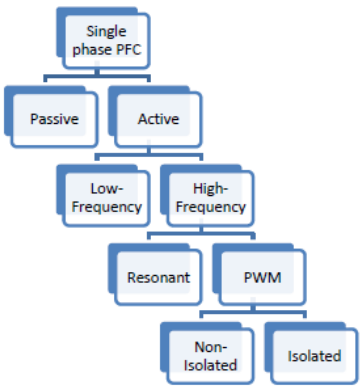


Fig.6 Different types of 1 phase PFC topologies

## ***Ac modelling approach***

## ***Boost converter AC modelling***

## ***Transfer function of Boost converter***

### 3.1 THE AC MODELLING OF BOOST CONVERTER

First there is derivation of small signal model of figure.

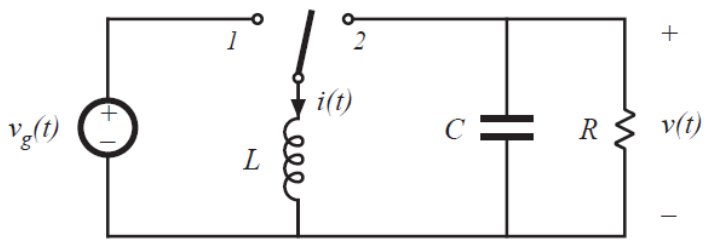


Fig.7 Boost converter circuit diagram

With reference to switch placement 1, the equations are:

$$v_L(t) = L\frac{di(t)}{dt} = v_g(t)$$

$$i_C(t) = C\frac{dv(t)}{dt} = -\frac{v(t)}{R}$$

The voltages $v_g(t)$ and $v(t)$ are replaced with $< v_g(t) >_{T_s}$ and $< v(t) >_{T_s}$, which are averaged values and where:

$$< x(t) >_{T_s} = \frac{1}{T_s}\int_t^{t+T_s} x(\tau)d\tau$$

The equation thus become

$$v_L(t) = L\frac{di(t)}{dt} = < v_g(t) >_{T_s}$$

$$i_C(t) = C\frac{dv(t)}{dt} = -\frac{< v(t) >_{T_s}}{R}$$

With reference to switch placement 2, the equations are:

$$v_L(t) = L\frac{di(t)}{dt} = v_g(t) - v(t)$$

$$i_C(t) = C\frac{dv(t)}{dt} = i(t) - \frac{v(t)}{R}$$

Performing the same steps as in equation, we obtain

$$v_L(t) = L\frac{di(t)}{dt} = \langle v_g(t)\rangle_{T_s} - \langle v(t)\rangle_{T_s}$$

$$i_C(t) = C\frac{dv(t)}{dt} = \langle i(t)\rangle_{T_s} - \frac{\langle v(t)\rangle_{T_s}}{R}$$

So in both intervals the current and voltage of inductor and capacitor have fixed gradient.

**Averaging the Inductor Waveforms:**

When the voltage of the inductor is averaged the expression obtained is:

$$\langle v_L(t)\rangle_{T_s} = \frac{1}{T_s}\int_t^{t+T_s} v_L(\tau)d\tau$$

$$= d(t)\langle v_g(t)\rangle_{T_s} + d'(t)[\langle v_g(t)\rangle_{T_s} - \langle v(t)\rangle_{T_s}]$$

Since the two intervals add up to unity, so

$$d'(t) = 1 - d(t)$$

As is evident from the equation there are no harmonics but only fundamental component of the voltage associated with inductor which is simplified to get:

$$L\frac{d\langle i(t)\rangle_{T_s}}{dt} = d(t)\langle v_g(t)\rangle_{T_s} + d'(t)\langle v_g(t)\rangle_{T_s} - \langle v(t)\rangle_{T_s}$$

$$= \langle v_g(t)\rangle_{T_s} - d'(t)\langle v(t)\rangle_{T_s}$$

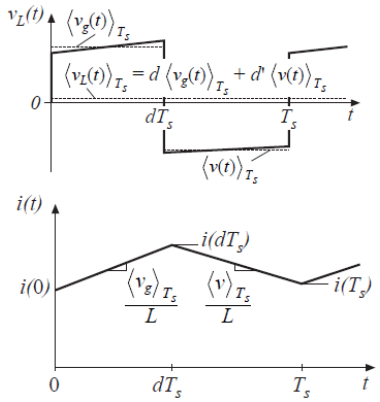


Fig.8 boost converter inductor voltage and current waveforms respectively

Let the initial value of current through inductor be i (0), hence at the completion of first interval:

$$i(dT_s) = i(0) + (dT_s)(\frac{< v_g(t) >_{T_s}}{L})$$

Similarly, at the completion of second interval it is:

$$i(T_s) = i(dT_s) + (d'T_s)(\frac{< v_g(t) >_{T_s} - < v(t) >_{T_s}}{L})$$

By substituting, we can express $i(T_s)$ in terms of $i(0)$

$$i(T_s) = i(0) + \frac{T_s}{L}[d(t) < v_g(t) >_{T_s} + d'(t)[< v_g(t) >_{T_s} - < v(t) >_{T_s}]]$$

$$= i(0) + \frac{T_s}{L} < v_L(t) >_{T_s}$$

**Averaging the Capacitor Waveforms**

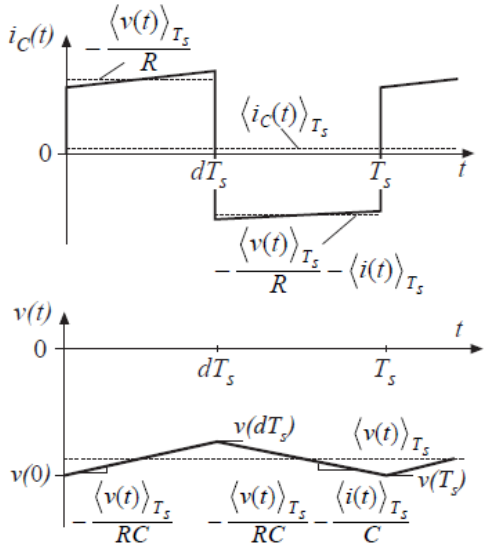


Fig. 9 Boost converter: capacitor current and voltage waveform.

When the current of the capacitor is averaged the expression obtained is:

$$< i_C(t) >_{T_s} = d(t)\left(-\frac{<v(t)>_{T_s}}{R}\right) + d'(t)\left( < i(t) >_{T_s} - \frac{<v(t)>_{T_s}}{R}\right)$$

As is evident from the equation there are no harmonics but only fundamental component of the voltage associated with capacitor which is simplified to get:

$$C\frac{< v(t) >_{T_s}}{dt} = d'(t) < i(t) >_{T_s} - \frac{< v(t) >_{T_s}}{R}$$

**The Average Input Current**

Upon averaging input current waveform over one switching period, we can obtain

$$< i_g(t) >_{T_s} = < i(t) >_{T_s}$$

**Linearization:**

Hence the three equations obtained on averaging are:

$$L\frac{d < i(t) >_{T_s}}{dt} = < v_g(t) >_{T_s} - d'(t) \ < v(t) >_{T_s}$$

$$C\frac{< v(t) >_{T_s}}{dt} = d'(t) < i(t) >_{T_s} - \frac{< v(t) >_{T_s}}{R}$$

$$< i_g(t) >_{T_s} = < i(t) >_{T_s}$$

These equations are non-linear as they contain quantities depending on time which have been multiplied. Most of the methods of ac modelling cannot be applied to nonlinear system, hence we need to construct a small signal model.

Suppose operating point of converter has duty ratio, $d\ (\ t\ )\ =\ D$ , and voltage $v_g(t) = V_g$. Thus all transients will subside and the current through inductor $< i(t) >_{T_s}$, the voltage across capacitor $< v(t) >_{T_s}$, and the input current $< i_g(t) >_{T_s}$ will reach the values *I*, *V* & *Ig*, *respectively*, and where

$$V = \frac{V_g}{D'}$$

$$I = \frac{I_g}{D'^2 R}$$

$$I_g = I$$

The input voltage $v_g(t)$ and the duty cycle $d(t)$ are presumed to be steady state values of $V_g$ and *D*, along with fluctuations $\widehat{v_g}(t)$ and $\hat{d}(t)$ . Thus,

$$\langle \widehat{v_g}(t) \rangle_{T_S} = V_g + \widehat{v_g}(t)$$

$$d(t) = D + \hat{d}(t)$$

Thus the average current through inductor $< i(t) >_{T_s}$ , the averaged voltage across capacitor $< v(t) >_{T_s}$, and averaged current in input side $< i_g(t) >_{T_s}$ will be:

$$< i(t) >_{T_s} = I + \hat{\imath}(t)$$

$$< v(t) >_{T_s} = V + \hat{v}(t)$$

$$< i_g(t) >_{T_s} = I_g + \widehat{\imath_g}(t)$$

The nonlinear equations are linearized because ac variations are presumed to be negligible in front of the dc steady state values. The inductor equation thus obtained as:

$$L\frac{d(I + \hat{\imath}(t))}{dt} = \left(V_g + \widehat{v_g}(t)\right) - \left(D' - \hat{d}(t)\right)(V + \hat{v}(t))$$

$$L\left(\frac{dI}{dt} + \frac{d\hat{\imath}(t)}{dt}\right) = \left(V_g - D'V\right) + \left(\widehat{v_g}(t) + V\hat{d}(t) - D'\hat{v}(t)\right) + \hat{d}(t)\hat{v}(t)$$

Since the derivative of I is zero, the dc terms are equated to zero obtaining the steady state conditions. The first order ac terms are collected since they are linear functions of the ac quantities which give the desired small-signal linearized inductor current equation. The second order terms are made zero

$$L\frac{d\hat{\imath}(t)}{dt} = \widehat{v_g}(t) + V\hat{d}(t) - D'\hat{v}(t)$$

Similarly the capacitor equation is written as:

$$C\frac{d(V+\hat{v}(t))}{dt} = -\frac{V+\hat{v}(t)}{R} + \left(D' - \hat{d}(t)\right)(I+\hat{\imath}(t))$$

$$C\left(\frac{dV}{dt} + \frac{\hat{v}(t)}{dt}\right) = \left(-\frac{V}{R} + D'I\right) + \left(-\frac{\hat{v}(t)}{R} - I\hat{d}(t) + D'\hat{\imath}(t)\right)$$

Removing second order terms we get:

$$C\frac{\hat{v}(t)}{dt} = -\frac{\hat{v}(t)}{R} - I\hat{d}(t) + D'\hat{\imath}(t)$$

Similarly,

$$\widehat{\imath_g}(t) = \hat{\imath}(t)$$

**Small-signal equivalent circuit modelling:**

$$L\frac{d\hat{\imath}(t)}{dt} = \widehat{v_g}(t) + V\hat{d}(t) - D'\hat{v}(t)$$

$$C\frac{\hat{v}(t)}{dt} = -\frac{\hat{v}(t)}{R} - I\hat{d}(t) + D'\hat{\imath}(t)$$

$$\widehat{\imath_g}(t) = \hat{\imath}(t)$$

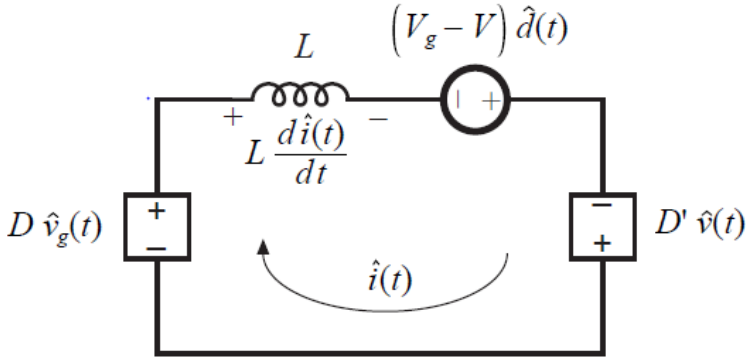


Fig.10 equivalent circuit of small-signal ac inductor loop.

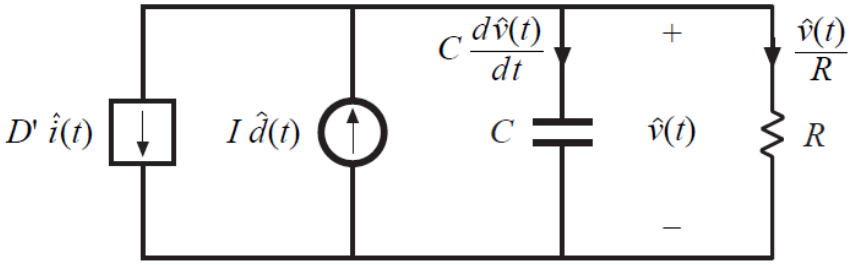


Fig.11 Equivalent circuit of small-signal ac capacitor node equation.

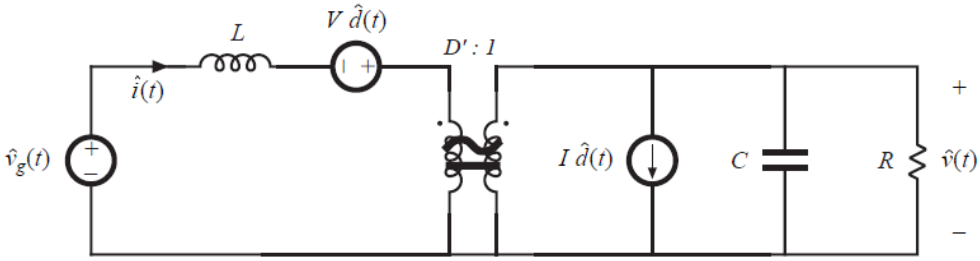


Fig 12: small-signal ac equivalent circuit of boost converter.

### 3.2 BOOST CONVERTER TRANSFER FUNCTION

The line-to-output transfer function is obtained by taking fluctuations in duty cycle to be zero and hence:

$$G_{vg}(s) = \frac{\hat{v}(s)}{\hat{v}_g(s)}\bigg|\hat{d}(s) = 0$$

Its importance lies in designing of an output voltage regulator.

The control-to-output transfer function is calculated by taking the input voltage fluctuations to zero, and hence:

$$G_{vd}(s) = \frac{\hat{v}(s)}{\hat{d}(s)}\bigg|\hat{v}_g(s) = 0$$

This transfer function describes the influence on output voltage by varying the control input. It is an important part of the loop gain in an output voltage regulator and has significant effect on regulator performance.

Referring to the small-signal equivalent model, the transfer functions is evaluated as:

$$G_{vg}(s) = \frac{\hat{v}(s)}{\hat{v}_g(s)} = \frac{1}{D'}\frac{(R\|\frac{1}{sC})}{(R\|\frac{1}{sC} + \frac{sL}{D'^2})} = \frac{D'R}{D'^2R + s^2RLC + sL}$$

Comparing with standard form as:

$$G_{vg}(s) = G_{g0}\frac{1}{1 + \frac{s}{Qw_0} + \left(\frac{s}{w_0}\right)^2}$$

We get,

$$G_{g0} = \frac{1}{D'}$$

$$Q = D'R\sqrt{\frac{C}{L}}$$

$$w_0 = \frac{D'}{RC}$$

Similarly,

$$G_{vd}(s) = \frac{V}{D'}\frac{(R\|\frac{1}{sC})}{(R\|\frac{1}{sC} + \frac{sL}{D'^2})} - I(\frac{sL}{D'^2}\|R\|\frac{1}{sC})$$

Comparing with standard formula,

$$G_{vd}(s) = G_{d0}\frac{1 - \frac{s}{w_z}}{1 + \frac{s}{Qw_0} + \left(\frac{s}{w_0}\right)^2}$$

Where,

$$G_{d0} = \frac{V}{D'}$$

$$w_z = \frac{D'^2 R}{L}$$

## ***Control Schemes of PFC Boost Converter***

### ***Peak Current Control Method***

### ***Average Current Control Method***

## 4.1 PEAK CURRENT CONTROL

The inner loop does the function of controlling averaged inductor current. During ON time the current through the switch is same as the current through the inductor. The peak current control method behaves similar to average current control only at that moment when the ripple in current are almost negligible. In buck topology the current at the output is same as that flowing through the inductor. But in boost topology the current in the input is same as that flowing through the inductor. In this method the inductor current is compared with a reference current obtained from the outer control circuit. The power switch is turned off by the comparator when the value of instantaneous current is equal to that of the reference current.

### 4.1.1 DISADVANTAGES OF PEAK CURRENT CONTROL:

**1. LESSER IMMUNE TO NOISES**:

The instantaneous current is appreciably smaller than the reference current. Due to this the circuit becomes prone to noises. During the start of the circuit huge amount of noises are observed. So a low magnitude voltage signal can affect the causing increment in the ripples associated with the circuit.

**2. SLOPE COMPENSATION REQUIRED:**

If the duty ratio is more than 0.5 then this method is unsuitable because it leads to generation harmonics and ripples. So to deal with it a slope compensation is required. In this regulator, slope of current through the inductor is $(-Vo/L)$. The value of output voltage is fixed and hence compensation slope is obtained easily. But in boost converter the slope of the inductor current depends on the input voltage as well. This helps in boosting the performance of the circuit as well as reducing the distortions

**3. PEAK TO AVERAGE CURRENT ERROR:**

When the magnitude of the current is low, the inductor current has a discontinuous waveform, because it is the natural tendency of the sine curve to attain zero in each half cycle. This makes the ratio between the currents employed in peak method and average method disastrous. So if the ratio will be high then will be distortions, ripple and noises.

## 4. TOPOLOGY ISSUES:

This method controls the current flowing through the inductor only at the output side. This method is used in case the configuration of inductor is in the output side of the circuit and that too only in case of buck converter, because in case of boost converter the output side does not have the inductor. Hence this method only works for buck topologies where as for other schemes it will lead to control of the wrong current.

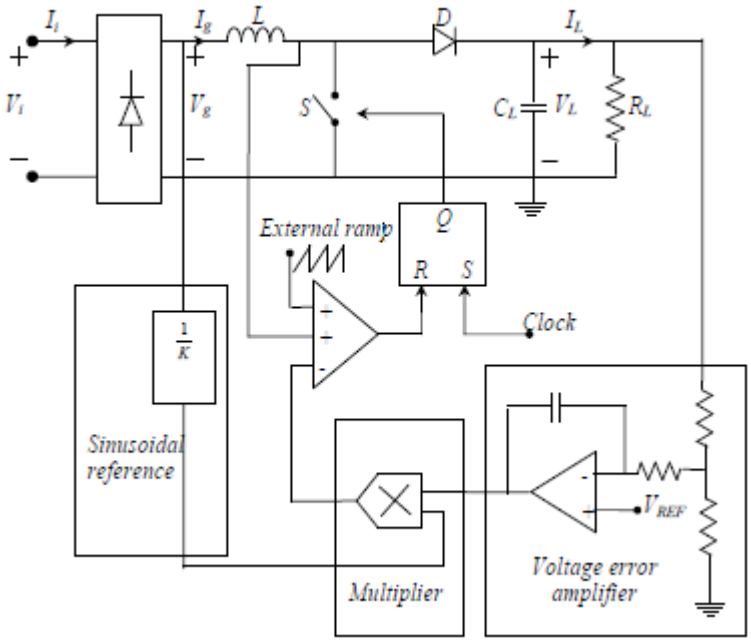


Fig. 13 Peak current control scheme

## 4.2 AVERAGE CURRENT MODE CONTROL

This method of control has two control circuit. The inner circuit is for controlling current whereas the outer circuit is to control the voltage. It shows excellent results in frequencies that are of the order of MHz. Due to its undisputed advantages over the peak control method
It is most popular and most widely used control method.
The advantages of this control method over its former counterpart are:
1) There is no necessity for a compensation ramp.
2) For low frequencies this method gives a boost to the DC gain value.
3) The noises, distortions, and ripples are lowered substantially.
4) The DC gain normally represents averaged values. So this method is useful for single phase ac-dc conversion using boost circuits.

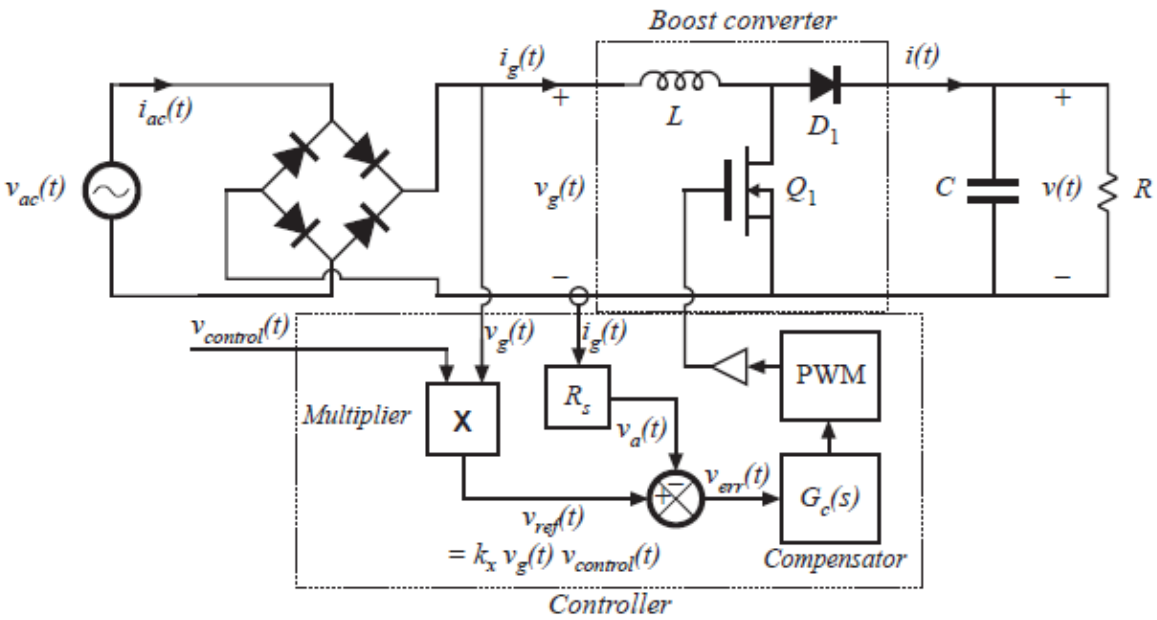


Fig. 14 Average current control scheme

With reference to fig. 14 Current sensor gain is given by:

$$v_a\,(\,t\,) = i_g\,(\,t\,)\,R_S$$

when the error signal is small,

$$v_a\ (\ t\ ) \approx v_{ref}\ (\ t\ )$$

The multiplier equation is given by the following expression:

$$v_{ref}\ (\ t\ ) = k_x\ v_g\ (\ t\ )\ v_{control}\ (\ t\ )$$

And finally $R_e$ is expressed by the following equation:

$$R_e = \frac{v_g(t)}{i_g(t)} = \frac{\left(\frac{v_{ref}(t)}{k_x v_{control}(t)}\right)}{\frac{v_a(t)}{R_S}}$$

After substituting $v_a\ (\ t\ )$ for $v_{ref}\ (\ t\ )$, we obtain the expression for $R_e$ as follows:

$$R_e = \frac{R_S}{k_x v_{control}(t)}$$

# ***Parallel Connection of two Boost Converters***

## *Parallel Connection*

## *Dual Boost PFC Modelling*

## *The Control Strategy*

## 5.1 BOOST CONVERTERS PARALLEL CONNECTION:

When two converters are connected in parallel their capacity is enhanced and they exhibit greater efficiency. But due to nonlinear nature of the system it can act in different unknown ways.

While designing this system the principle problem is to make the current share among the two converters. This may sound feasible in theory but in practice two voltage sources are impossible to be connected in a parallel connection. However if a proper control circuit is designed it may work practically. Hence the most popular method of control is used to solve the problem which is ACMC control method.

In this method the one converters is phase shifted from its counterpart, but at the same time their frequency of switching is same. The main advantages of this method is:

- Cheap and feasible
- Compact and portable
- Highly reliable
- Reduces the ripples in input current to a greater extent
- The losses due to conduction also drastically get reduced.
- The sizes of the inductor and capacitor used in the circuit also get reduced significantly.

## 5.2 DUAL BOOST PFC CIRCUIT MODELLING:

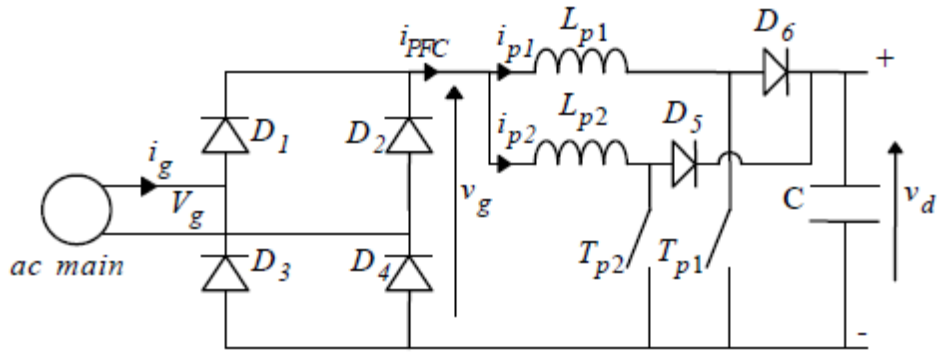


Fig 15: Dual Boost Power Factor Correction Circuit.

Referring to fig.15, the equations regarding the voltage are found out, assuming that the PFC circuit works in continuous conduction mode:

$$v_g = L_{p1}\frac{di_{p1}}{dt} + R_1 i_{p1} + f_{p1} v_d$$

$$v_g = L_{p2}\frac{di_{p2}}{dt} + R_2 i_{p2} + f_{p2} v_d$$

$$i_{PFC} = i_{p1} + i_{p2}$$

where:

$$v_g\,(\,t\,) = \left|\, V_g \ \sin\,(wt)\right|$$

$$f_{p1} = \begin{Bmatrix} 0\ when\ T_{p1} = 1\ (switch\ on) \\ 1\ when\ T_{p1} = 0\ (switch\ off) \end{Bmatrix}$$

$$f_{p2} = \begin{Bmatrix} 0\ when\ T_{p2} = 1\ (switch\ on) \\ 1\ when\ T_{p2} = 0\ (switch\ off) \end{Bmatrix}$$

$v_g(t)$ and $f_{p1}$, $f_{p2}$ are the source main voltage and PFC commutation functions. The above equations are written below without taking into consideration the inductors' resistance:

$$f_{p1} = 0 \rightarrow \frac{d\ i_{p1}\,(\,t\,)}{dt} = \frac{v_g\,(\,t\,)}{L_{P1}}$$

$$f_{p1} = 1 \rightarrow \frac{d\ i_{p1}\,(\,t\,)}{dt} = \frac{v_g\,(\,t\,) - \ v_d\,(\,t\,)}{L_{P1}}$$

$$f_{p2} = 0 \rightarrow \frac{d\ i_{p2}\,(\,t\,)}{dt} = \frac{v_g\,(\,t\,)}{L_{P2}}$$

$$f_{p2} = 1 \rightarrow \frac{d\ i_{p2}\,(\,t\,)}{dt} = \frac{v_g\,(\,t\,) - \ v_d\,(\,t\,)}{L_{P2}}$$

where:

$$i_{b1} \geq 0\ and\ i_{b2} \geq 0$$

because the ac/dc diode rectifier is unidirectional. Hence, the control of Power Factor Correction currents can be obtained only if the equation stated below is satisfied:

$$v_d\,(\,t\,) > \; v_g\,(\,t\,)$$

The derivative of the total Power Factor Correction current $i_{PFC}$ can be controlled if the above mentioned condition is satisfied.

## 5.3 THE CONTROL STRATEGY:

Two boost converters when connected in parallel gives high power factor. Theoretically the removal of the ripple in the current $i_{PFC}$ is possible but for that the following equations have to be satisfied:

$$\frac{v_g\,(\,t\,)}{L_{p1}} = \frac{v_g\,(\,t\,) - v_d\,(\,t\,)}{L_{p2}}$$

with:

$$d_2 = 1 - d_1$$

where d1 and d2 are the duty cycles of the two boost converter circuits respectively.

Unfortunately, the solutions satisfying the above two conditions come out to be:

$$v_d(\,t\,) = 2v_g(\,t\,)\; and\; L_{PFC1} = L_{PFC2}$$

and the above constraints can only be applied to an ideal working condition. And hence this is not possible in a real industrial example.

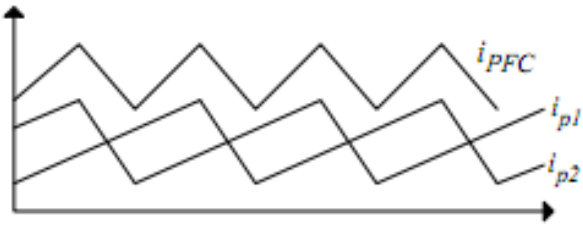


Fig 16: Input currents of two interleaved Power Factor Correction circuits.

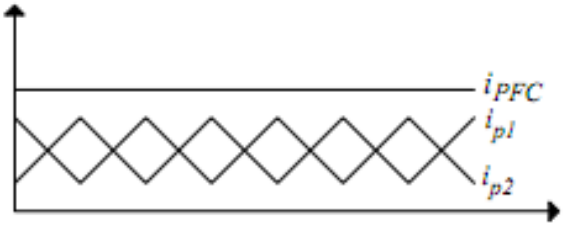


Fig 17: Input currents of two interleaved Power Factor Correction Circuits in ideal working condition.

In fig.18 the currents of two Power Factor Correction circuits on the input side are shown. The working is based on internal active filtering method. It is impossible to completely remove the $i_{PFC}$ ripple by this method.

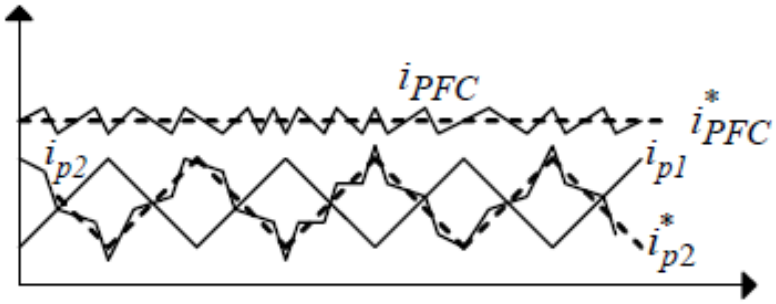


Fig. 18: Input currents of two Power Factor Correction circuits based on internal active filtering approach.

# ***EMI Filter***

## *EMI Input Filter*

## *Simulation Results*

## 6.1 EMI FILTER REQUIREMENTS

There are two modes of EMI. The first one is differential mode EMI while the second one is common mode EMI. The converters have input currents whose ripple usually has very high frequency. These frequencies generally promote differential mode EMI. The switching converters also suffer from some parasitic effects. These are generally the cause of the second mode of EMI i.e. common mode EMI. If the frequency is above 2MHz, then the EMI is dominated by common mode EMI. And if the frequency is less than 2MHz then the EMI is dominated by differential mode EMI.

In most of the cases the PFC circuits having high frequency makes the differential mode EMI dominant in the circuit and increases it by about 30dB to 60Db. The EMI filter must satisfy the standards set for EMI limits. Generally three aspects should be kept in mind while designing the EMI filter for PFC circuit. The first one is to give necessary attenuation to it which can be achieved by a one stage filter consisting of an inductor and capacitor.

With reference to the phasor diagram which provides the details of currents and voltages of system whose frequency is same as that of line frequency, it is presumed that input current signal$i_g$ is purely sinusoidal and is a scalar multiple of voltage signal denoted by $v_g$. It is assumed that line voltage is almost equal to $v_i$since filter inductor $L_a$ has almost negligible voltage drop across itself. The PF is detoriated due to as current due to capacitor introduces a phase lag between the line current and line voltage. Hence the second important necessity is that the phase angle between the line current and line voltage should be minimized. This can be achieved by properly setting the values of $L_a$ and $C_a$ , such that $C_a$ should be below a certain maximum value and $L_a$ should be above a certain minimum value such that their product gives the required attenuation. The third and the most important is to ensure the correct stability of the system. Usually there are chances of instability in the converter due to interaction between the converter stage and the power stage. It happens for power factor correctors operating with almost all control modes including peak current mode control method, ACMC method and also in DC/DC converters

With respect to the thevenin circuit, $H_f$is filter transfer function, $Z_{of}$ is output impedance of the EMI filter and $Z_{ic}$ is the input impedance of PFC stage. Now let the loop gain be $T_f$. For stability it must satisfy the Nyquist criterion. If $|T_f| \ll 1$ the instabilities in the system perish on account of the lessened interaction between the filter and power stage. Hence,$|Z_{of}| \ll |Z_{ic}|$ is the required condition for stable functioning of the filter which looks almost impossible to

fulfil because at resonant frequency $|Z_{of}|_{max}$ is proportional to $\sqrt{\frac{L}{C}}$. Now, $|T_f| > 1$ at low $Z_{ic}$ when line voltage is low and load current is high. Hence, if $Z_{ic}$ exhibits large positive phase change, then $T_f$ may not satisfy Nyquist criterion and the system becomes unstable. Hence the input impedance should be known to find out the stability of the system.

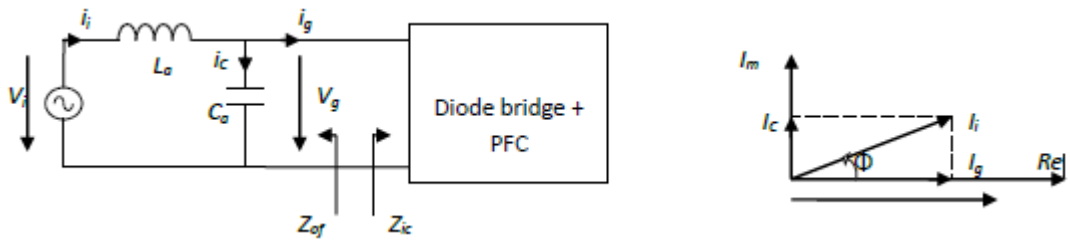


Fig 19: attenuation of differential-mode EMI: a) Schematic; b) Phasor diagram of currents and voltages associated with the system.

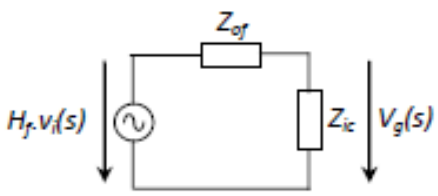


Fig.20 Thevenin's equivalent circuit

## 6.2 SIMULATION AND RESULTS:

## MODEL OF RECTIFIER CIRCUIT WITHOUT ANY PFC CIRCUIT:

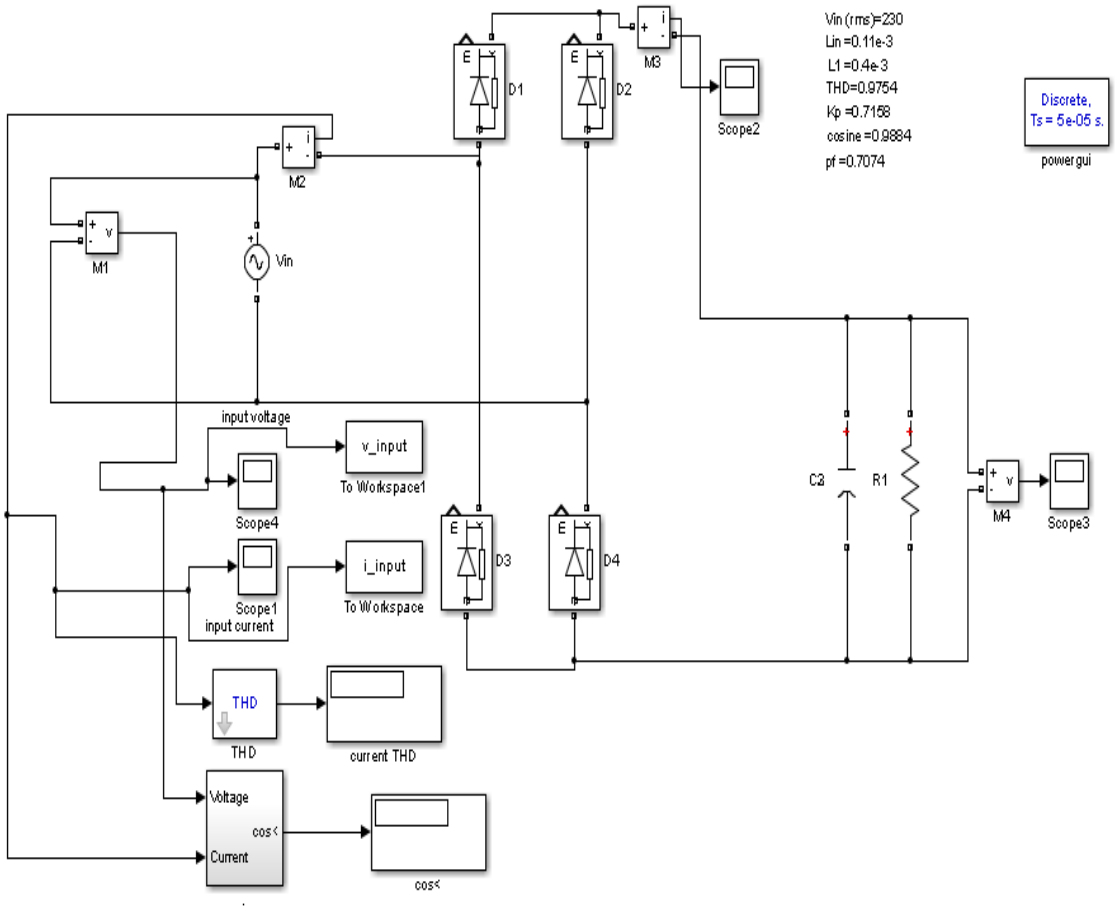


FIGURE 21: SIMULINK BLOCK OF RECTIFIER CIRCUIT WITHOUT ANY PFC CIRCUIT

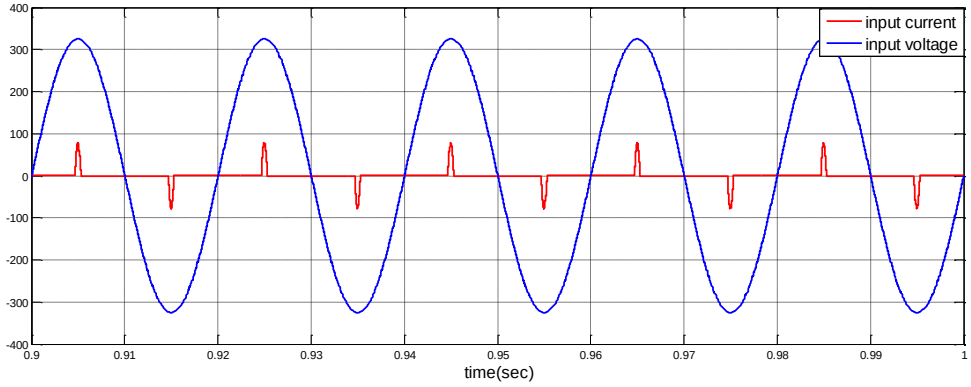


Fig.22 Plot of input voltage and input current vs. time for rectifier circuit without PFC circuit.

## MODEL OF RECTIFIER CIRCUIT WITH BOOST CONVERTER FOR PFC

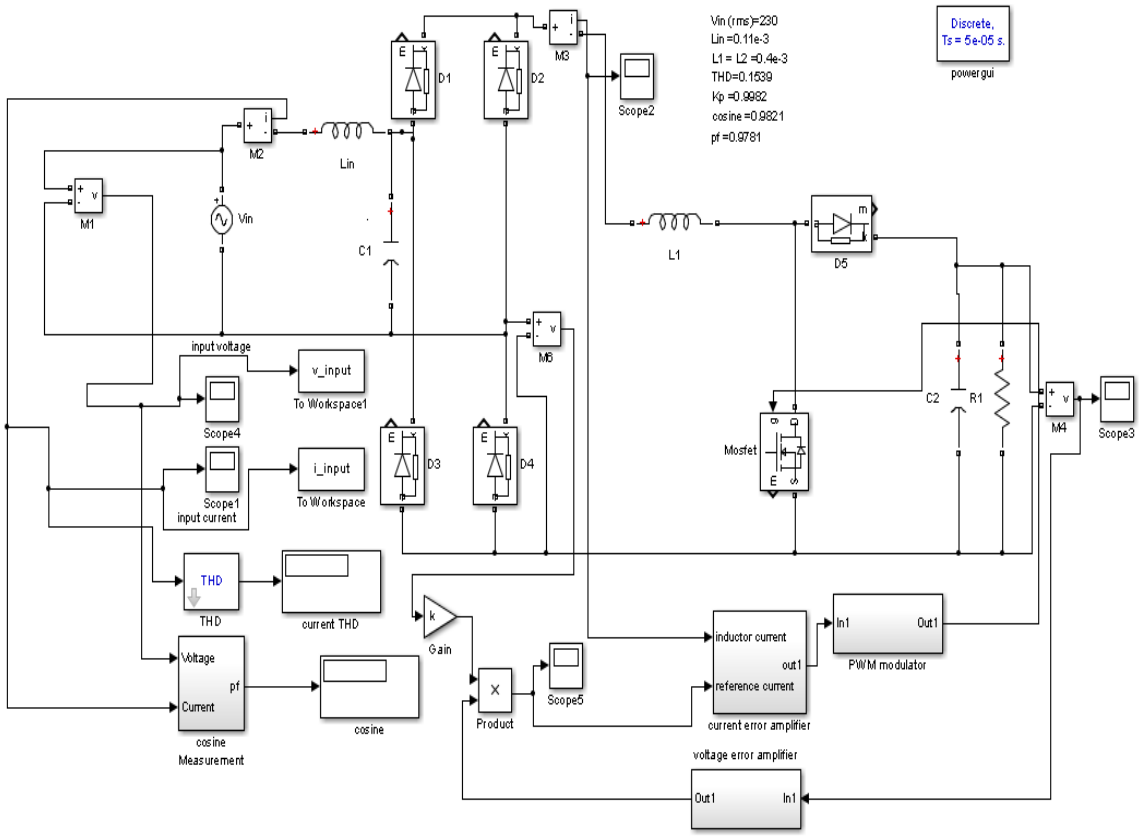


FIGURE 23: SIMULINK BLOCK OF RECTIFIER CIRCUIT WITH BOOST CONVERTER FOR PFC USING ACMC METHOD

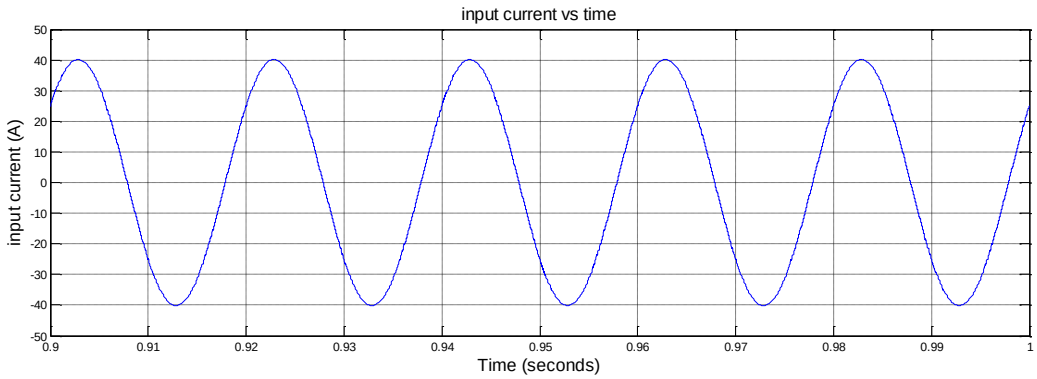


Fig.24 Plot of input current vs. time for a rectifier circuit with boost converter as PFC circuit using ACMC method

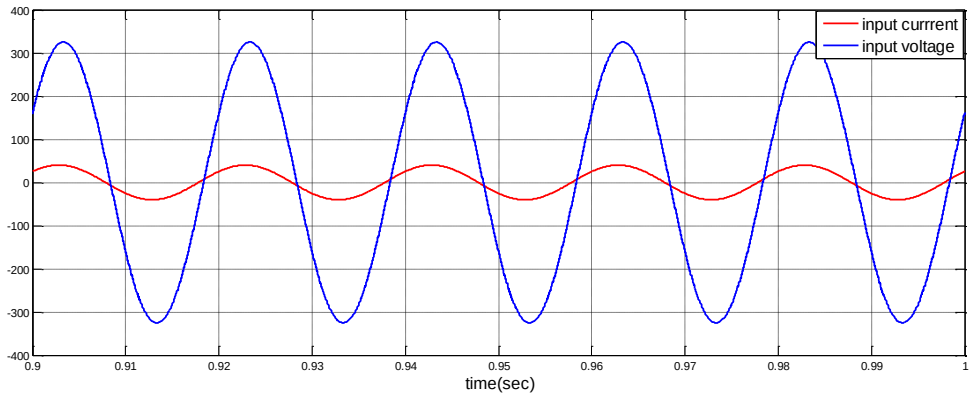


Fig.25 Plot of input voltage and input current vs. time for a rectifier circuit with boost converter as PFC circuit using ACMC method

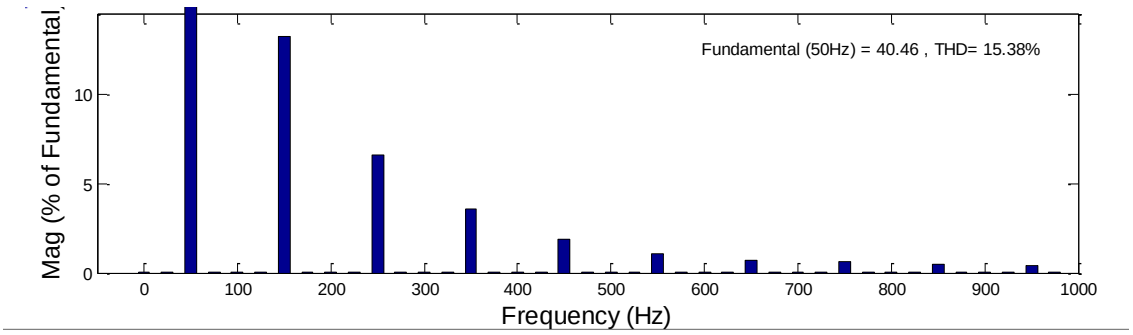


Fig.26 Line current harmonics for a rectifier circuit with boost converter as PFC circuit using ACMC method.

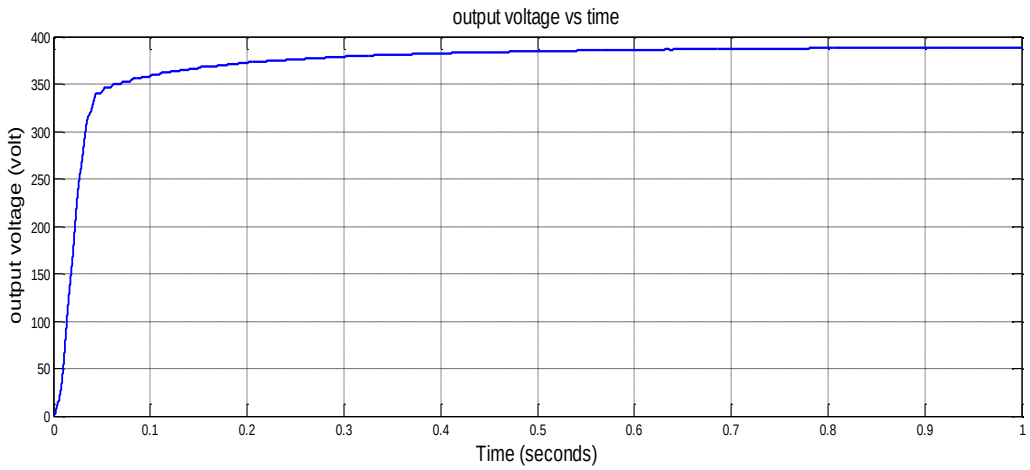


Fig.27 Output voltage for a rectifier circuit with boost converter as PFC circuit using ACMC method.

## MODEL OF RECTIFIER CIRCUIT WITH A PARALLEL BOOST CONVERTER FOR PFC

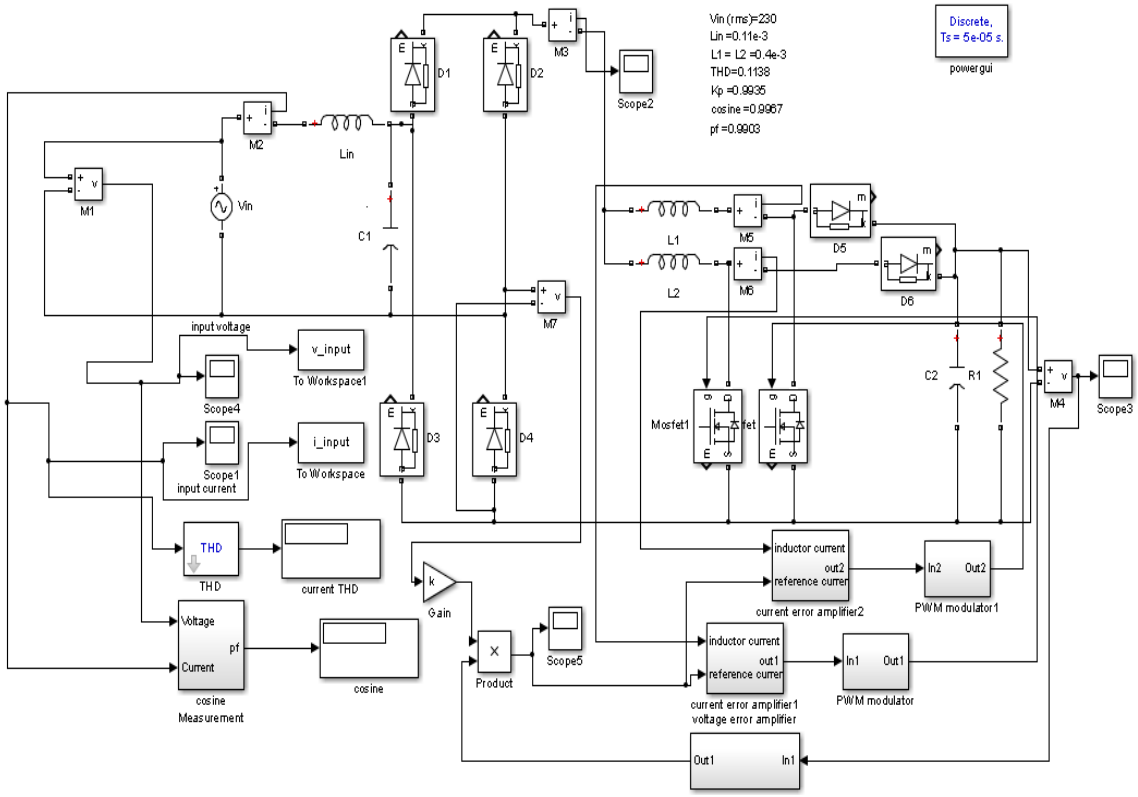


FIG.28: SIMULINK BLOCK OF RECTIFIER CIRCUIT WITH A PARALLEL BOOST CONVERTER FOR PFC

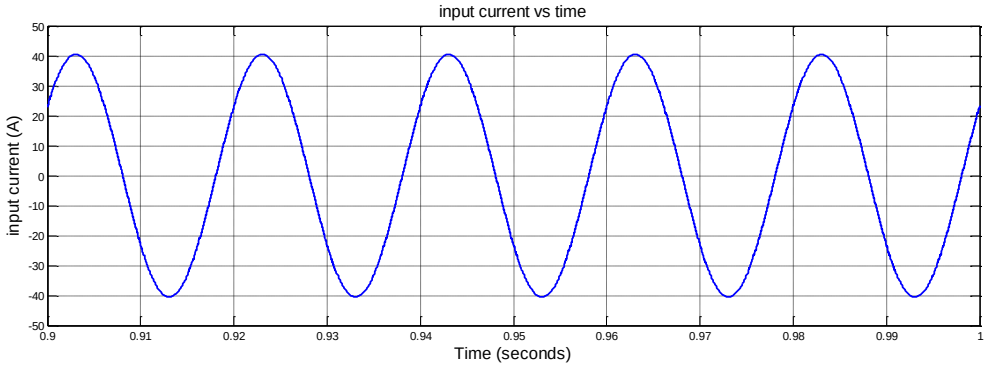


Fig.29 Plot of input current vs. time for a rectifier circuit with parallel boost converter as PFC circuit.

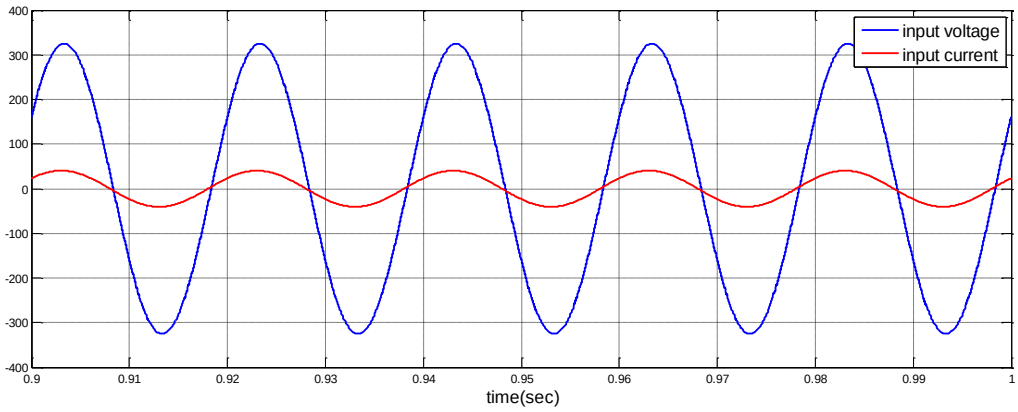


Fig.30 Plot of input voltage and input current vs. time for a rectifier circuit with parallel boost converter as PFC circuit.

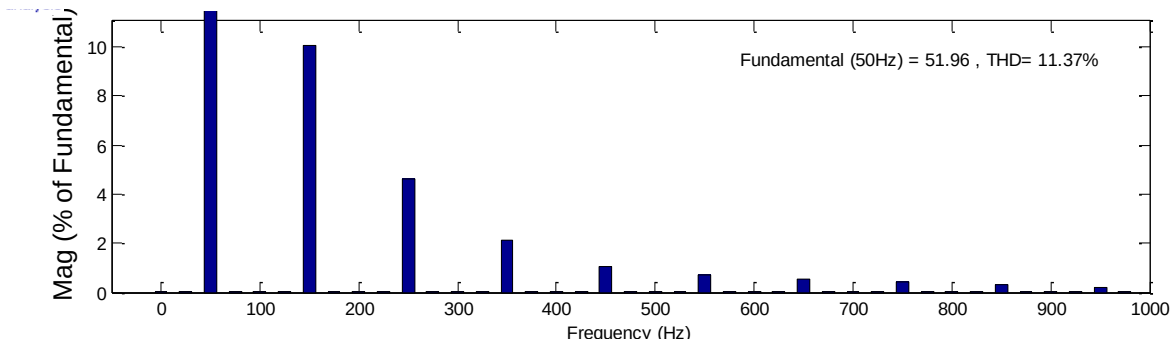


Fig. 31 Line current harmonics for a rectifier circuit with parallel boost converter as PFC circuit.

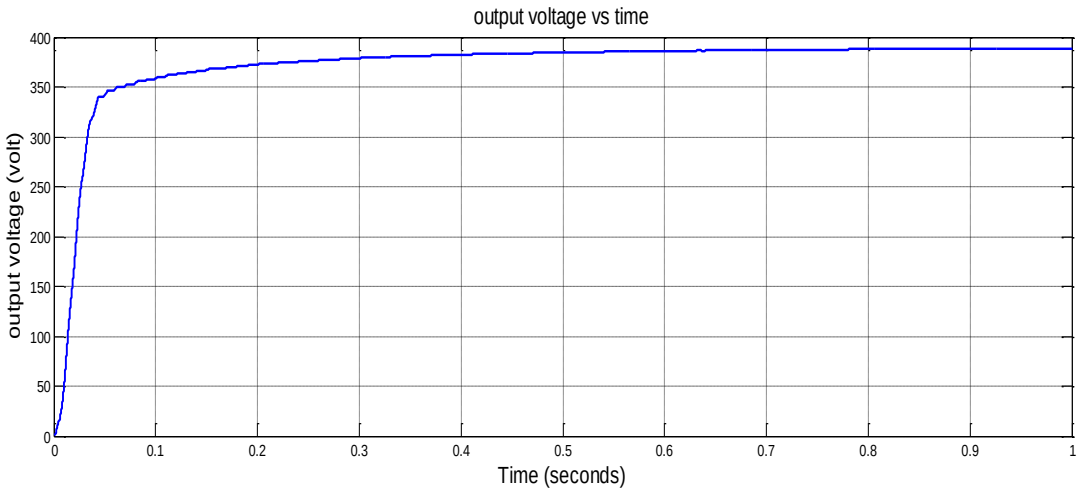


Fig. 32 Output voltage for a rectifier circuit with parallel boost converter as PFC circuit.

**CALCULATIONS**

1. **RECTIFIER CIRCUIT WITHOUT ANY PFC CIRCUIT :**

THD = 0.975

Cosine = 0.9884

Kp = 0.7158

Power Factor = 0.7074

2. **RECTIFIER CIRCUIT WITH BOOST CONVERTER FOR PFC:**

THD = 0.1539

Cosine = 0.9821

Kp = 0.9982

Power Factor = 0.9781

3. **RECTIFIER CIRCUIT WITH A PARALLEL BOOST CONVERTER FOR PFC :**

THD = 0.1138

Cosine = 0.9967

Kp = 0.9935

Power Factor = 0.9903

# CONCLUSION

Improvement of the power factor with the reduction of harmonics are the key areas where the project has been made to focus. The initial simulation start with a simple rectifier circuit without imposing any control circuit or EMI filter. This was followed by a circuit consisting a control circuit based on Average current mode control method. The current waveform, PF and THD changed drastically, which are recorded. Finally a PFC circuit in which two boost converters were arranged in parallel fashion was designed. The average current mode control method was chosen because it keeps a close track with the current program. Finally to confirm the improvement in PF and THD (Total Harmonic Distortion), these parameters for three circuits:

1) Rectifier Circuit only without any PFC.

2) Rectifier Circuit with a single boost converter for PFC by ACMC method and with an EMI filter.

3) Rectifier Circuit with a parallel boost converter for PFC.

were calculated. The results are summarised as below:

By modelling the Boost Converter using ACMC method and at the same time adding to it an EMI filter (consisting of inductor and capacitor) at input side for power factor correction, THD is found to be 0.1538. When the two boost converters were connected in parallel, THD and power factor improved further and THD came out to be 0.1137. The second boost converter which is connected in parallel to its counterpart filters the harmonics and improves the current quality

## REFERENCES:

[1] Ms. Kurma Sai Mallika,"*Topological Issues in Single Phase Power Factor Correction*", Thesis, Degree of Master of technology In Power control and drives, Department of electrical engineering National institute of technology Rourkela- 769008, 2007.

[2] Fairchild Semiconductor- "Application Note 42047,Power Factor Correction (PFC) Basics" –www.fairchildsemi.com

[3] Rashid M., Power Electronics Handbook.

[4] Yiqing Zhao, "*single phase power factor correction circuit with wide output voltage range*", Thesis, Degree of Master of Science, Electrical Engineering, Fred C. Lee, Chairman, Dusan Borojevic, Dan Y. Chen, February 6, 1998, Blacksburg, Virginia

[5] Rossetto, L., *et el.* "Control techniques for power factor correction converters." University of Padova, Via Gradenigo 6/a, 35131 Padova – ITALY. (1994): pp. 1-9.

[6] Redl, Richard, "Reducing distortion in peak-current-controlled boost power factor correctors." Proc. of IEEE Applied Power Electronics Conference, APEC'94. (1994): pp. 576-583.

[7] Maksimovic, Dragan, "Design of the clamped-current high-power-factor boost rectifier." IEEE Trans. on Industry Applications. vol. 31, no. 5, (Sept - Oct. 1995): pp. 986-992.

[8] Canesin, Carlos A., *et el.* "Analysis and design of constant-frequency peak-current controlled high power-factor boost rectifier with slope compensation." Proc. of IEEE Applied Power Electronics Conference, APEC'96. (1996): pp. 807-813.

[9] Lai, J. S., "Design consideration for Power Factor Correction Boost converter Operating at the Boundary of Continuous Conduction mode and Discontinuous Conduction mode." Proc. of IEEE Applied Power Electronics Conference, APEC'93. (1993): pp. 267-273.

[10] Redl, Richard, *et el.* "Power-Factor Correction with Interleaved Boost Converters in Continuous-Inductor-Current Mode." Proc. of IEEE Applied Power Electronics Conference, APEC'93. (1993): pp.168-174.

[11] Attaianese, C.; Nardi, V.; Parillo, F.; Tomasso, G.; " Predictive Control of Parallel Boost Converters" in Industrial Electronics,2008, IECON 2008, 34th Annual Conference of IEEE.

[12] Wu, M. K. W., *et el.* "A review of EMI problems in switch mode power supply design." Journal of Electrical and Electronics Engineering, Australia. vol. 16, nos. 3&4, (1996): pp. 193-204.