OPAMP REALIZATION AND PID CONTROLLER FABRICATION

Submitted in the partial fulfilment of the requirements for the degree of Bachelor of Technology

Submitted by

Soumya Ranjan Kanhar(112EE0232)

Under the Guidance of

Prof. Sandip Ghosh

Department of electrical engineering
National Institute of Technology Rourkela
Odisha-769008

Department of Electrical Engineering
National Institute of Technology Rourkela
Rourkela-769008, Odisha, India

Supervisors' Certificate

This is to certify that the work presented in this dissertation allowed to have a systematic study on " **OPAMP Realization and PID Controller Fabrication** " by "**Soumya Ranjan Kanhar**", **Roll Number 112EE0232**, is a record of unique exploration carried out by him under our supervision and guidance in partial fulfilment of the requirements of the degree of **Bachelor of Technology in Electrical Engineering** .Neither this dissertation nor any part of it has been submitted for any degree or diploma to any institute or university in India or abroad.

Date:

Place:

Prof **Sandip Ghosh**
Principal Supervisor
Dept. of Electrical Engineering
National Institute of Technology
Rourkela, Odisha-769008

Declaration of Originality

*I, **Soumya Ranjan Kanhar**, **Roll Number 112EE0232** hereby declare that this dissertation entitled "**Opamp Realization and PID Controller Fabrication**" speaks to my unique work completed as a B.tech understudy of NIT Rourkela and, to the best of my insight, it contains no material already distributed or composed by someone else, nor any material exhibited for the recompense of some other degree or recognition of NIT Rourkela or some other foundation. Any commitment made to this examination by others, with whom I have worked at NIT Rourkela or somewhere else, is unequivocally recognized in the thesis. Works of different creator's referred to in this exposition have been properly recognized under the segment "Bibliography". I have likewise presented my unique exploration records to the investigation panel for assessment of my paper.*

I am completely mindful that in the event of any resistance distinguished in future, the Senate of NIT Rourkela may pull back the degree granted to me on the premise of the present exposition.

July 11, 2016 **Soumya Ranjan Kanhar**

NIT Rourkela

ACKNOWLEDGEMENT

I am thankful to my guide and motivator Prof. Sandip Ghosh, Professor, Electrical Engineering Department, National Institute of Technology, Rourkela for his precious guidance, sympathy and co-operation for providing necessary facilities and sources during the entire period of this project.

At this moment I would also like to express my gratitude for the technical staff of our laboratories. They have always helped me in every-way they can during my experimental phase of the work.

Date: 11/07/2016

Soumya Ranjan Kanhar
112EE0232

ABSTRACT

The PID control is the most commonly known for control process utilized as a part of industries for controlling action. The basic technique for PID controllers makes it simple to coordinate the process output. As the term PID suggest, it comprises of three separate constant parameters which are adjusted in order to get ideal, steady and faster response. In the control process, the majority of control loops based upon proportional, integral and derivative controller. For specific process, the tuning of three parameters of controller is able to provide specific control action to the system. Design methods leading to an optimal and effective operation of PID controllers are economically vital for process industries.

The main focus of the project is about study of OPAMP and fabrication of an analog PID Controller using the three control parameters. The Controller design is demonstrated through simulation in order to get an output of better dynamic and static performance. The controller is fabricated on hardware after the test of individual terms:-proportional, integral and derivative. The resultant output from controller is observed using the oscilloscope.

LIST OF FIGURES

LIST OF TABLES

CONTENTS

1. INTRODUCTION

Almost all process control today more than 95% are PID controller. Earlier, the experiments were done all with controllers by Ziegler and Nichols [1]. However, the nature of controllers was moderate. After the development of the electronics devices and operational amplifiers, the controllers were replaced by the electronic controllers. Nowadays, the main focus of the development is the implementation with digital PID controllers [2]. The highest advantage of utilizing digital PID controllers is that the controllers parameters can be modified easily; subsequently, without changing any equipment, they can be changed. Moreover, other than creating the control activity, the same advanced system can be utilized for various different applications [3]. But, here we are concerned with the study and implementation of analog PID controller design and how they can be realized in real practice. We may examine and discover strategies to do the configuration in specific cases. This requires we should to put a few limitations and imperatives alongside pre-determined performance conditions so as to show signs of improvement quality control in terms of performances. So, controller design requires different types of factors to be dealt with.

Each control system intended for a detail or particular application needs to meet certain performances determinations. A few techniques determining the performances of a control system are:-

1. By set of specifications in time domain and/or in frequency domain such as peak overshoot, settling time, gain margin, phase margin, steady-state error etc.

2. By optimality of a certain function, e.g., an integral function.

Here, the choice of plant segments to be controlled is directed by performance as well as size, weight, accessible force supply, cost and so forth. In this way, the plant for the most part cannot meet the performance details. In spite of the fact that the designer is allowed to pick elective components, this is generally not done on account of cost, accessibility and different requirements.

However,a few components of a plant, its substitution are not a major issue in view of ease and extensive variety of accessibility of such amplifiers. Just by gain modification, it might be conceivable to meet the given details on performances of basic control systems. In such cases, adjustments in gains appears to be the most straight and basic method for design. In most cases, the gain modification does not give the desired result. Under such circumstances, it is important to present some sort of suitable subsystems to drive the chosen plant to meet the specific performances. These subsystems are known as controllers/compensators and their application is to make up for the lack in the performances of the plant.

There are essentially two ways to deal with the problems in designing control system [7]:-

1. We select the configuration of the overall system by introducing controller and then choose the performance parameters of the controller to meet the given specifications on performance.

2. For a given plant, we find overall system that meets the given specification and then compute the necessary controller.

The first approach will be used below in the work.

In this way, we find that plant components are resolved considering different variables and plant cannot meet these particulars. For this adjustments in gain appears to be appropriate, as replacing by alternative components may be costly or impractical. This is because the steady state error transfer function is inversely proportional to open loop gain and is given by:-

$$\frac{E(s)}{R(s)} = \frac{1}{1+G(s)}$$

Where

G(s) = open loop transfer function or gain

However gain adjustment using such Proportional gain (P)leads to oscillatory transient response and may lead to instability, although it reduces steady state error to some extent. Along these lines, we utilize a PID controller which can have the benefit of making the system response quicker, decrease the unfaltering state mistake to zero or inside an attractive resilience limit. Here we concentrate each of the control parameters viz., proportional, integral, derivative independently or with arrangement as PD or PI and after that we can manufacture a PID controller on equipment for an arbitrary plant utilizing proper tuning systems[5]. PID controllers, when utilized alone, can give poor performances when the PID loop gains must be decreased so that the control system does not overshoot, oscillate about the control set point value. Another issue confronted with PID controllers is that they are linear, and specifically symmetric. In this manner, performance of PID controllers in non-linear systems is variable. The most important change is to include feed forward control with information about the system, and utilizing the PID just to control error. On the other hand, PIDs can be altered in more minor ways, for example, by changing the parameters, enhancing measurements, or cascading numerous PID controllers [4] [6].

2. BACKGROUND AND LITERATURE REVIEW

A proportional-integral-derivative controller (PID controller) is a common feedback loop component in industrial control system [1]. The Controller compares a measured value from a process (typically an industrial process) with a reference set point value. The difference (or "error" signal) is then used to calculate a new value for a manipulable input to the process that brings the process measured value back to its desired set point. Unlike simpler control algorithms, the PID controller can adjust process outputs based on the history and rate of change of the error signal, which gives more accurate and stable control (It can be shown mathematically that a PID loop will Produce accurate, stable control in cases where a simple proportional control would either have a steady-state error or would cause the process to oscillate).

In older control literature this adjustment process is called a "reset"action. The position of the needle on the gauge is a "measurement", "process value" or "process variable". The desired value on the gauge is called a "set point" (also called "set value"). The difference between the gauge's needle and the set point is the"error" [2].

A control loop consists of three parts:

a). Measurement by a sensor connected to the process .

b). Decision in a controller element.

c). Action through an output device such as an motor.

As the controller reads a sensor, it subtracts this measurement from the "set point" to determine the "error". It then uses the error to calculate a correction to the process's input variable (the "action") so that this correction will remove the error from the process's output measurement.

In a PID loop, correction is calculated from the error in three ways: cancel out the current error directly (Proportional), the amount of time the error has continued uncorrected (Integral), and anticipate the future error from the rate of change of the error over time (Derivative).

A PID controller can be used to control any measurable variable which can be affected by manipulating some other process variable. For example, it can be used to control temperature, pressure, flow rate, chemical composition, speed, or other variables [3].

PID" is named after its three correcting calculations, which all add to and adjust the controlled quantity. These additions are actually "subtractions" of error, because the proportions are usually negative:

Proportional

To handle the present, the error is multiplied by a (negative) constant P (for "proportional"),and added to (subtracting error from) the controlled quantity. P is only valid in the band over which a controller's output is proportional to the error of the system. Note that when the error is zero, a proportional controller's output is zero.

Steady-state error

Because a non-zero error is required to drive it, a proportional controller generally operates with a so-called steady-state error. Steady-state error (SSE) is proportional to the process gain and inversely proportional to proportional gain. SSE may be moderated by adding a compensating bias term to the set point or output, or corrected dynamically by adding an integral term.

Integral

To learn from the past, the error is integrated over a period of time, and then multiplied by a constant I (making an average), and added to (subtracting error from) the controlled quantity. I averages the measured error to find the process output's average error from the set point. A simple proportional system either oscillates, moving back and forth around the set point because there's nothing to remove the error when it overshoots, or oscillates and stabilizes at a too low or too high value. By adding a negative proportion of (i.e. subtracting part of) the average error from the process input, the average difference between the process output and the set point is always being reduced. Therefore, eventually, a well-tuned PID loop's process output will settle down at the set point [6].

Derivative

To handle the future, the first derivative over time is calculated, and multiplied by another (negative) constant D, and also added to (subtracting error from) the controlled quantity. The derivative term controls the response to a change in the system. The larger the derivative term, the more rapidly the controller responds to changes in the process's output.

Loop Tuning

Tuning" a control loop is the adjustment of its control parameters (gain/proportional band, integral gain/reset, derivative gain/rate) to the optimum values for the desired control response. The optimum behavior on a process change or set point change varies depending on the application. Some processes must not allow an overshoot of the process variable from the set point. Other processes must minimize the energy expended in reaching a new set point. Generally stability of response is required and the process must not oscillate for any combination of process conditions and set points.

Stability

If the PID controller parameters are chosen incorrectly, the controlled process input can be unstable, i.e., its output diverges, with or without oscillation, and is limited only by saturation or mechanical breakage. Instability is caused by excess gain, particularly in the presence of significant lag.

Generally, stabilization of response is required and the process must not oscillate for any combination of process conditions and set points, though sometimes marginal stability (bounded oscillation) is acceptable or desired.

The total loop transfer function is:

$$H(s) = \frac{K(s)G(s)}{1+K(s)G(s)}$$

Where

K(s): PID transfer function

G(s): Plant transfer function

PID CONTROL

Proportional-Integral-Derivative (PID) controllers are one of the most commonly used types of controllers. They have numerous applications relating to temperature control, speed control, position control, etc [3]. A PID controller provides a control signal that has a component proportional to the tracking error of a system, a component proportional to the accumulation of this error over time and a component proportional to the time rate of change of this error. This module will cover these different components and some of their different combinations that can be used for control purposes. The proportional, integral and derivative terms are summed to calculate the output of the PID controller. Defining U(t) as the controller output, the final form of the PID algorithm is given by [3]:

$$\mathbf{U(t) = MV(t)} = \boldsymbol{k_p e(t) + k_i \int_o^t e(k) d(k) + k_d \frac{de(t)}{dt}}$$

Where

$\boldsymbol{k_p}$: Proportional gain

$\boldsymbol{k_i}$: Integral gain,

$\boldsymbol{k_d}$: Derivative gain,

$\boldsymbol{e}$: Error

$\boldsymbol{t}$: Instantaneous time

k : Variable of integration

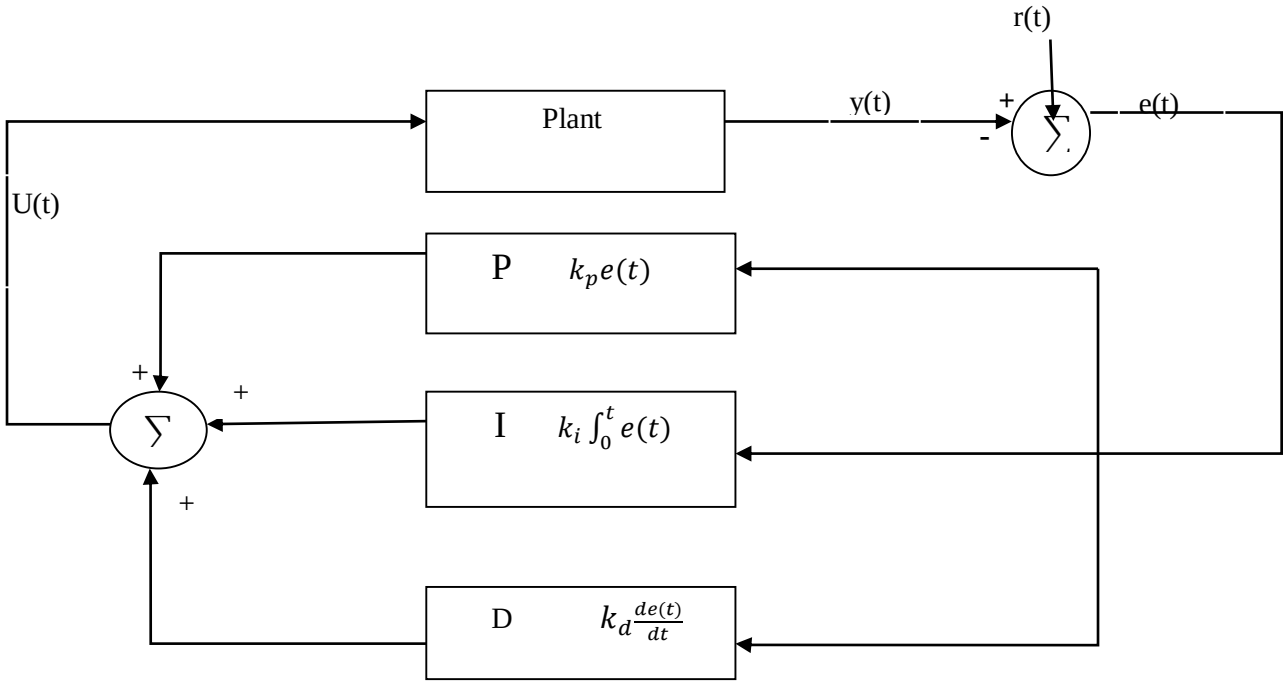

FIG 1:- BLOCK DIAGRAM OF PID CONTROLLER

The above block diagram and equation shows the PID controller behavior in time domain form. The time domain analysis is used for real-time results and to determine various gain parameters like rise time, peak overshoot, steady-state error etc. However, there is another form of representation that helps in determining the performance parameters like stability, gain and phase margins etc.

REPRESENTATION OF TRANSFER FUNCTION

PID control equation in Laplace transform form is given by :

$$G(s) = k_p + \frac{k_i}{s} + k_d s = \frac{k_d s^2 + k_p + k_i}{s}$$

k_p, k_d and k_i are the proportional, derivative and integral gain respectively. This transfer function can be realised using various RLC circuits, OPAMP circuits etc. This function is in frequency domain thus, being used for frequency domain analysis. As we can see from the transfer function, it has one pole at s=0 i.e. origin and two zeros. The addition of a pole to the system and that too on the imaginary axis makes the system sluggish. And the form is useful for designing of the controller.

3. ANALOG PID IMPLEMENTATION

For implementing analog pid controller we can use various circuits using the operational amplifiers [4][5].

The closed loop gain of the inverter circuit is given by

$$G(s) = -\frac{Z_f(s)}{Z_i(s)}$$

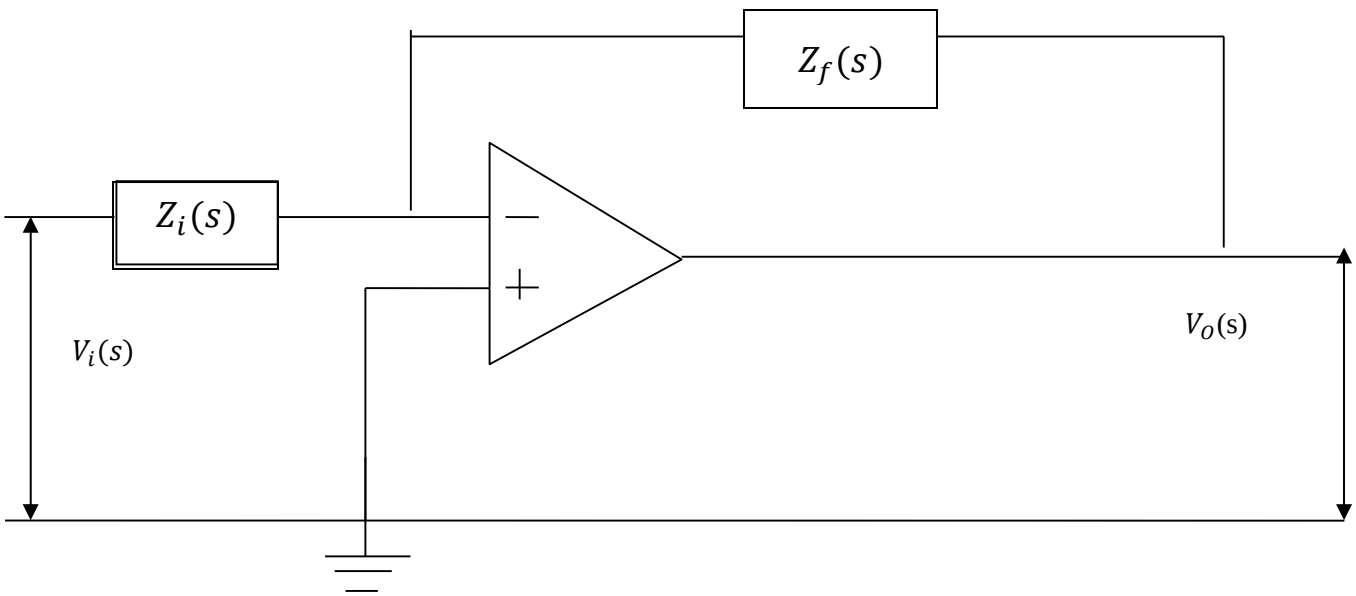

FIG 2:- INVERTER CIRCUIT

For different values of $\boldsymbol{Z_f(s)}$ **and** $\boldsymbol{Z_i}$(s), we get various control actions thus implement different types of controller.

Table 1:-

Controller	$\boldsymbol{Z_f}$	$\boldsymbol{Z_i}$	**Transfer function G(s)**
P	$\boldsymbol{R_f}$	$\boldsymbol{R_i}$	$\frac{-R_f}{R_1}$
PI	$\boldsymbol{R_f} + \frac{1}{sC_f}$	$\boldsymbol{R_i}$	$-\left[\frac{R_f}{R_i} + \frac{1}{sC_f R_i}\right]$
PD	$\boldsymbol{R_f}$	$\frac{R_i}{sC_i R_{i+1}}$	$\frac{-R_f}{R_i}(sC_i R_i + 1)$
PID	$\boldsymbol{R_f} + \frac{1}{sC_f}$	$\frac{R_i}{sC_i R_{i+1}}$	$\frac{-(sC_i R_i + 1)(sC_f R_f + 1)}{sC_f R_i}$

Transfer function using OPAMPS

So, the transfer functions using OpAmp for PID controller as above in table

$$G(s) = \frac{-(sC_i R_i + 1)(sC_f R_f + 1)}{sC_f R_i}$$

The transfer function can take following shape as per the diagram

$$G(s) = -\left(\frac{R_{P2}}{R_{P1}} + \frac{sC_D R_D}{sC_D R_C + 1} + \frac{1}{sC_1 R_1}\right)$$

This circuit contains a summer circuit that sums up command signal generated by each of the control terms and finally an inverter is used for getting positive value of transfer function.

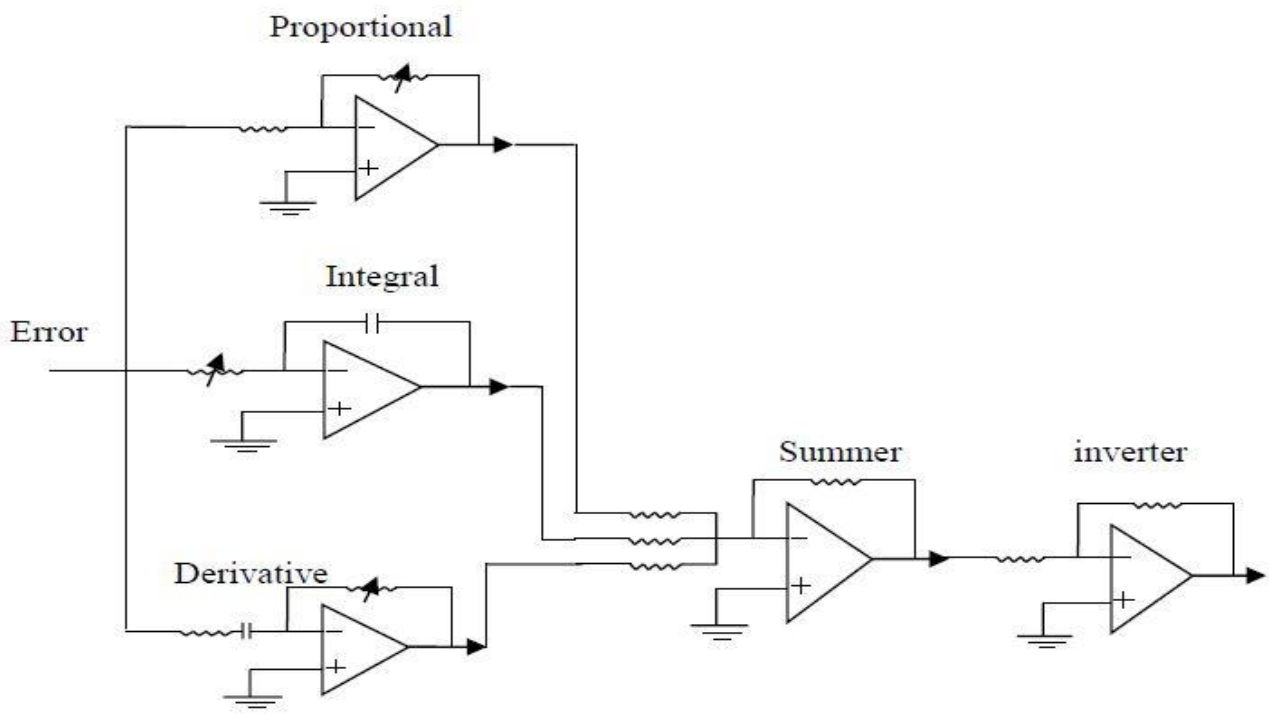

FIG 3:- CIRCUIT DIAGRAM OF PID CONTROLLER

IMPACTS OF GAIN PARAMETERS ON PERFORMANCES

Consider a second order system and its transfer functions of the following form:

$$G(s) = \frac{b}{s^2+as+b}$$

The study of second order system is essential since it is simple and higher order system can be approximated to a reasonable degree by second order systems and hence, one can get idea and knowledge regarding the dynamics of the system and steady state error.

The dynamics can be examined by knowing the damping and undamped natural frequency.This can give known from the system response viz., peak overshoot (M_p), rise time (t_r), settling time (t_s), steady-state error (e_{ss}).

- Rise time: The time required by response to rise from 10% to 90% of final value for overdamped system and 0 to 100% for underdamped system.
- Peak overshoot is normalized difference between peak of response and steady state output normalized w.r.t. to steady output.
- Settling time: The time required for the oscillations to die down and stay within 2% of the final value.
- Steady-state error is the error between the actual output and desired output as tends to infinity.

By presentation of PID controller we can control these above system dynamics utilizing tuning strategies and in this way, it decides different parameters. The impacts of these parameters on system response are given in below table.

Here we can improve steady state stability by reducing the error. Increasing the value of the steady state error reduced significantly. While above two lead to oscillatory response at first, the derivative control improves the settling time and makes the overshoot within certain range.

TABLE 2:-

Parameter	**Rise time**	**Overshoot**	**Settling time**	**Steady-state error**	**Stability**
k_p	Decrease	Increase	Small change	Decrease	Degrade
k_i	Decrease	Increase	Increase	Eliminate	Degrade
k_d	Minor change	Decrease	Decrease	No effect in theory	Improve if is small

Effects of increasing control parameter independently

Table shows how change in various gain parameters affects the response of the system Both transient and steady state.

THE OPAMP

The OPAMP stands for operational amplifier. It is specially design amplifier used for voltage amplification, buffering, analog filtering. An OPAMP is a amplifier with various typical properties such as very high gain, differential input, single ended output, very low output impedance. The amplified voltage is the output voltage [5].

The basic operation of the OPAMP can be summarized. First we assume that there is a portion of the output that is fed back to the inverting terminal to establish the fixed gain for the amplifier. This is negative feedback. Any differential voltage across the input terminals of the OPAMP is multiplied by the amplifier's open-loop gain. If the magnitude of this differential voltage is more positive on the inverting (-) terminal than on the non-inverting (+) terminal, the output will go more negative. If the magnitude of the differential voltage is more positive on the non-inverting (+) terminal than on the inverting (-) terminal, the output voltage will become more positive. The open-loop gain of the amplifier will attempt to force the differential voltage to zero. As long as the input and output stays in the operational range of the amplifier, it will keep the differential voltage at zero, and the output will be the input by the gain set by the feedback. Note from this that the inputs respond to differential mode not common-mode input voltage [5].

OPAMP LM741IC

It is one of the popular used devices for analog circuit. Mainly available as IC in 8-pin dual, in-line package [5] [7].

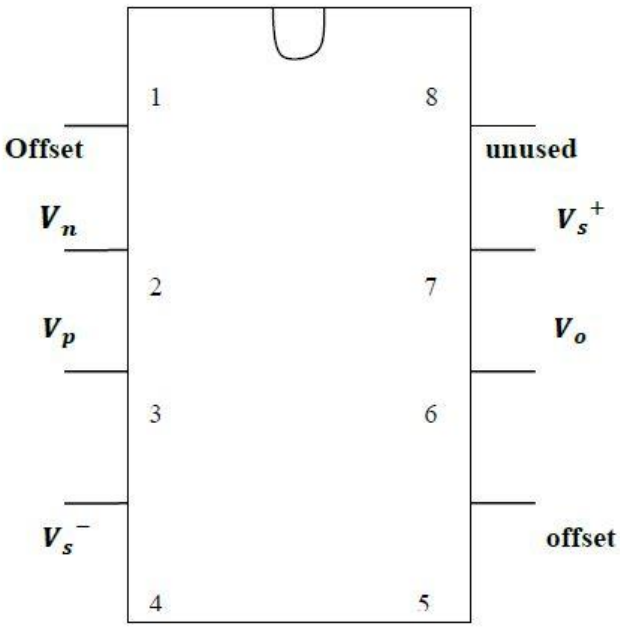

FIG 4:- PIN CONFIRGURATION OF LM741IC

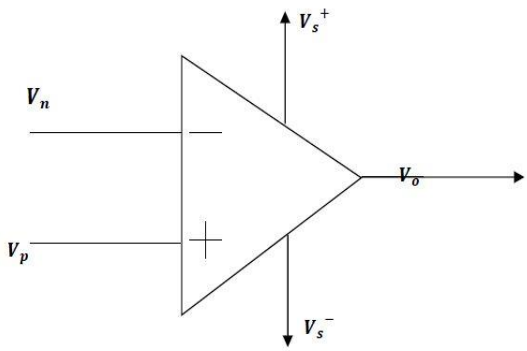

FIG 5:- CIRCUIT SYMBOL OF OPAMP

LM741IC DATASHEET

Absolute maximum Ratings [6].

TABLE 3:-

	LM741A8	LM7412	LM741C5
Supply Voltage5	±22V	±22V	±18V
Power Dissipation	500 mW	500 mW	500 mW
Differential Input Voltage	±30V	±30V	±30V
Input Voltage	±15V	±15V	±15V
Output Short Circuit Duration	Continuous	Continuous	Continuous

“Absolute Maximum Ratings “indicate the limits beyond which damage to the device may occur. Operating Ratings indicate the conditions for which the device is functional, but do not ensure specific performance limits. For operation at elevated temperatures, these devices must be derated based on thermal resistance.

For supply voltages less than ±15V, the absolute maximum input voltage is equal to supply voltage.

OPAMP REALIZATION

BUFFER:-

It is a circuit configuration in which the output voltage is fed back into the inverting input voltage. The OPAMP amplify the difference between non inverting input voltage and inverting input voltage. In this circuit, the output voltage is equal to the input voltage i.e. gain is unity. The significance of this circuit is that it isolates the input and output side. It has very high input impedance and very low input impedance [7].

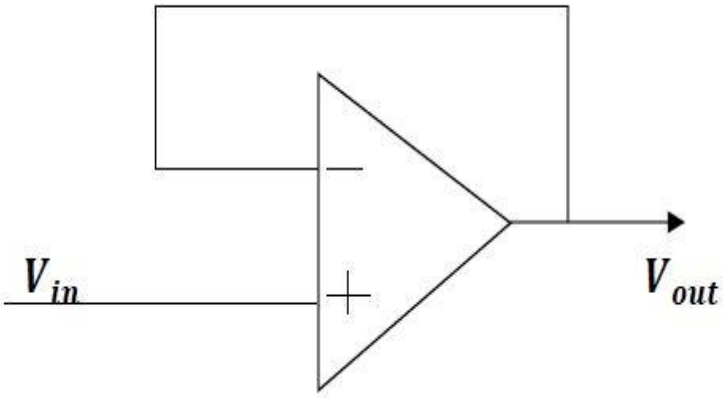

FIG 6:- BUFFER CIRCUIT

INVERTER CIRCUIT:-

In this circuit, the input is applied directly to the inverting terminal and the output is 180º out of phase of the input. The polarity of the circuit changes with amplification.
Here the gain value is,

$$\text{Gain} = -\frac{R_2}{R_1}$$

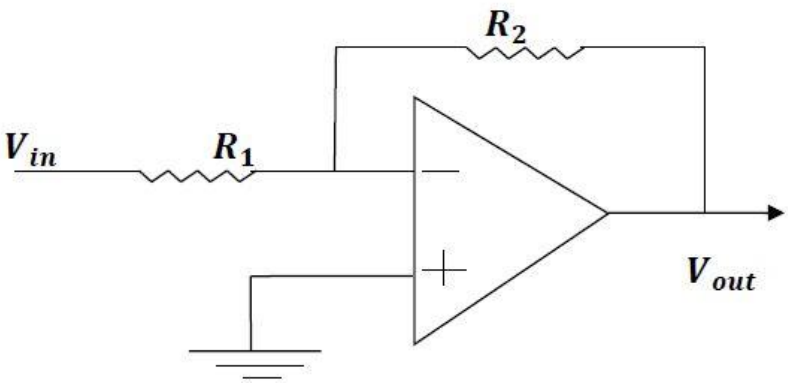

FIG 7:- SIGNAL INVERTER CIRCUIT

Adder/Summer:-

This circuit helps in the summing or adding together several input signals.
Here the output voltage of the circuit is proportional to the sum of the input voltage.
The output voltage is given by

$$V_{out} = V_{in1} + V_{in2} + V_{in3}$$

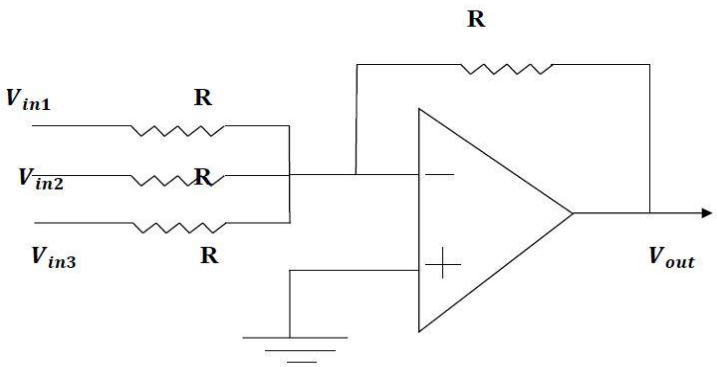

FIG 8:- ADDER CIRCUIT

SUBTRACTOR/ DIFFERENTIATOR:-

This circuit gives an output that is the difference of the two inputs given to the OPAMP circuit. The circuit is provided with resistance all are of same value. Here output signal is given as`

$$V_{out} = V_{in1} - V_{in2}$$

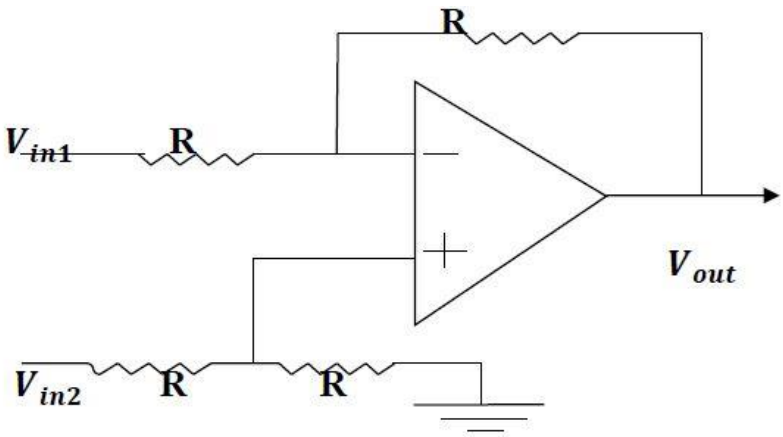

FIG 9:- DIFFERENTIATOR CIRCUIT

4. CHOICE OF CIRCUIT PARAMETERS

Here, we assume our plant to be anything arbitiary and our controller should be the tunable. Firstly, we have to determine the values of k_p, k_i and k_d for the pid controller. Then, we need to test each components of the controller viz proportional, integral, derivative terms separately and integrate together [6]. Therefore, implementing the components for proportional controller is done using LM741IC OPAMP for this purpose with a potentiometer of 100kohms and resistor of 1kohms. Here value of the k_p should be in range 0 to 100.

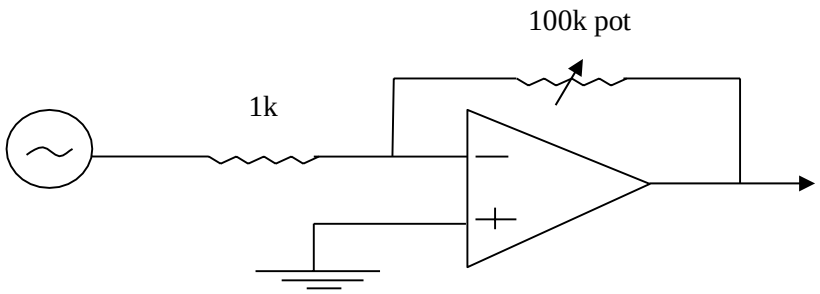

FIG 10:- PROPORTIONAL CONTROLLER

A sinusoidal signal/voltage wave from the function generator is applied to the input of controller circuit. The amplitude of input voltage wave is 2volts and frequency of 100kHz. The input and output voltage waveforms were observed in CRO. The results were noted and waveforms were traced in tracing paper or recorded. The experiment was repeated by varying the values of using k_p potentiometer. Results were viewed and traced.

Now, we needed to do the same test with the derivative controller. Here, we needed to supply a ramp input and check the output. Since, ramp signal cannot be generated due to saturation, so, we used a triangular wave input to the controller.

As we required 0<=k_d <=10, we use a 10micro Farad capacitor, a 1K resistor and a 1M pot for the purpose, as shown in below circuit diagram. Waveforms were viewed in CRO and traced in tracing paper.

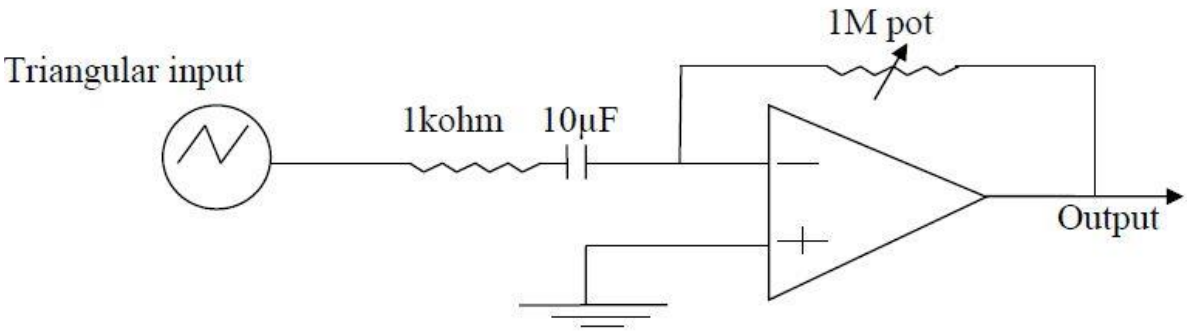

FIG 11:- DERIVATIVE CONTROLLER

Next, we repeated the test for integral controller with circuit diagram as shown below. Components required were 1 micro Farad capacitor and 1M pot and a small, resistance say 1kohm was put in series with the capacitor as shown in the circuit diagram above. Input given to the controller was a square wave. Output waveforms were viewed and traced in a tracing paper. Results were obtained for different values of by varying the potentiometer. The same was repeated by replacing the 1 micro Farad capacitor with a 10 micro Farad capacitor.

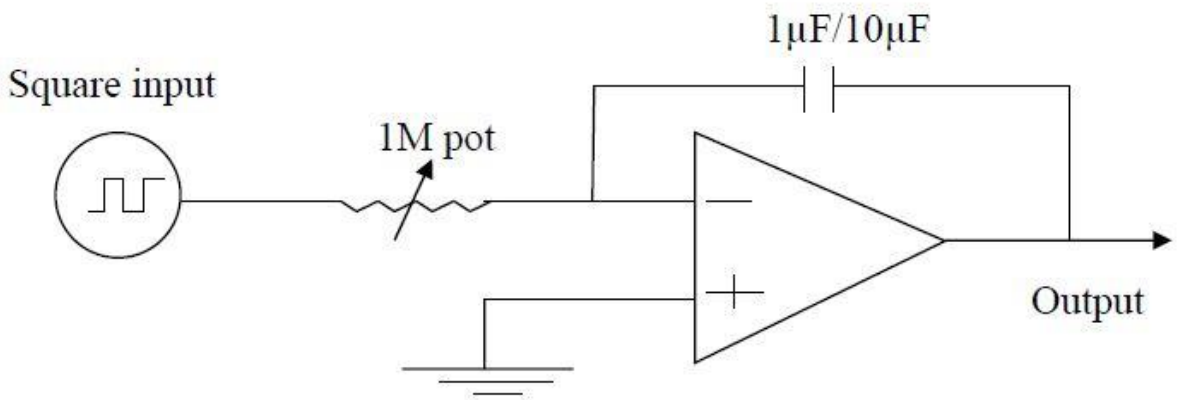

FIG 12:- INTEGRAL CONTROLLER

After, the testing the all of the controller we proceed to fabricate our required PID controller according to the circuit diagram for design given below. The components are assembled, connection were made according to the circuit design on the bread board. The components used for the fabrication are described in table below. The supply voltage of ±15V is given to the OPAMP. Input is supplied from a function generator and output waveforms were observed in CRO. And the waveform were recorded or traced using tracing paper. Then the components were removed from the bread board and fabrication was done on PCB board. Finally the fabrication of the required controller is completed.

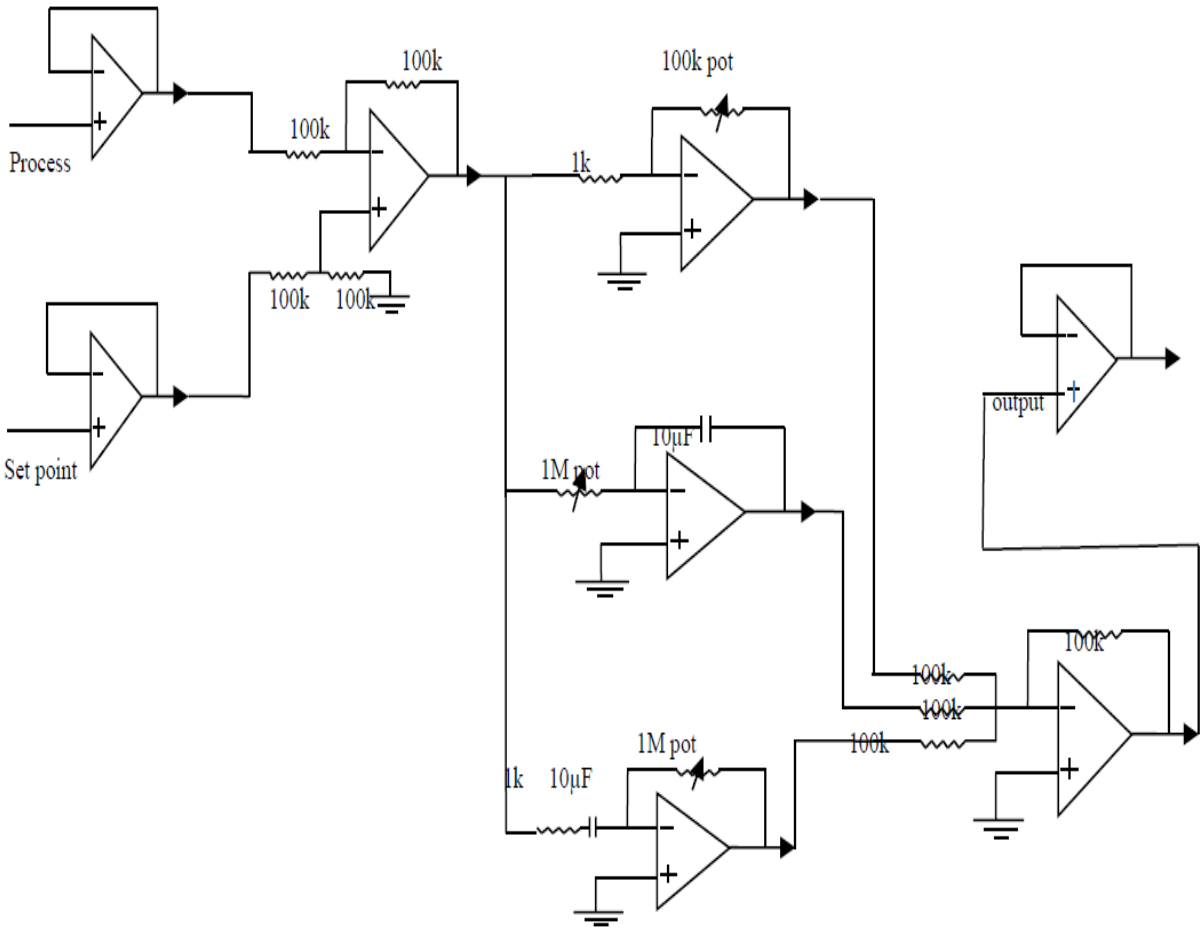

FIG 13:- COMPLETE PID CONTROLLER CIRCUIT

Dedicated as input buffer, while one for output buffer. The process variable and set point variable are given at the input and we get the same values of input at the output terminals. Next, both the inputs are subtracted using another OPAMP IC which uses four equal resistors of 100k each. This generates an error signal at its output. The output of this is given to each of the individual controllers viz., proportional, integral and derivative. The controllers are nothing but three signal inverters with two resistors in proportional control and one capacitor and one resistor in both integral and derivative controls with their position exchanged in each. The output of the three controllers is summed up using a summer circuit and then passed through a buffer circuit. By using the buffer circuit, we are isolating the whole control circuit from outside loads. The controls of the variables are achieved using the three potentiometers as shown in figure. As we can see that proportional term contains a 100k pot, derivative and integral terms contain 100M pots, which is done in order to achieve required range of values of k_p,k_i and k_d. In the derivative control, we find a small resistor of 1kohms. This is given in order to save the capacitor from short circuiting because we know that uncharged capacitor when connected to a voltage source acts like a short circuit [6] [7].

5. CONTROL DESIGN

DESIGN OF CIRCUIT USING MULTISIM

PID CIRCUIT

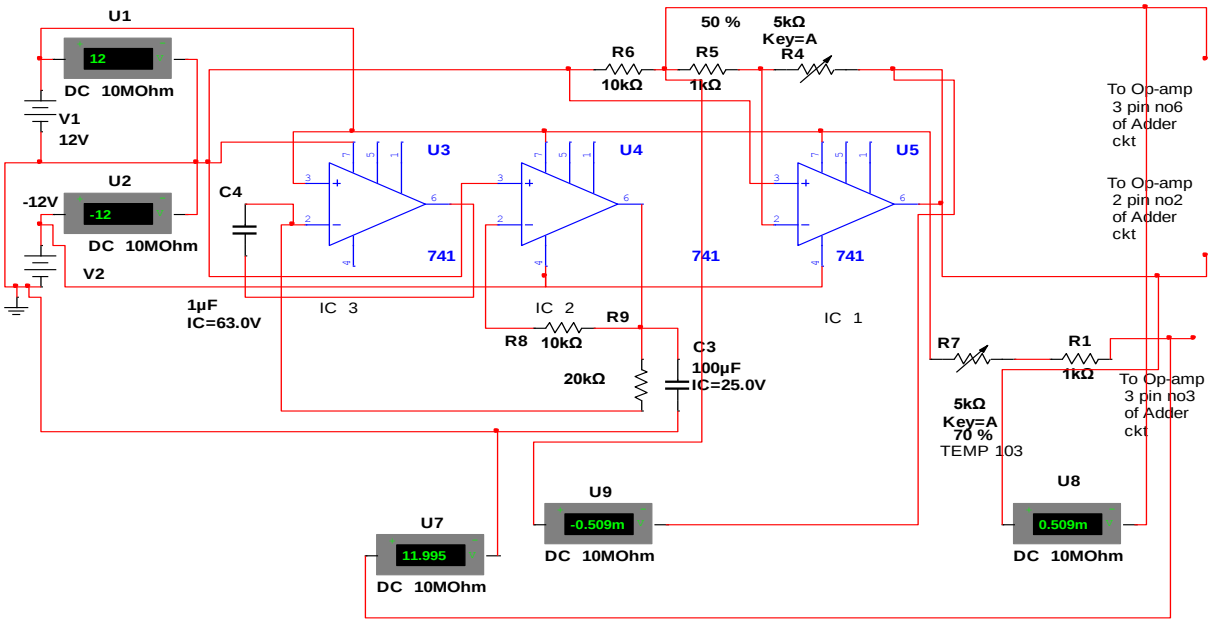

ADDER/INVERTER

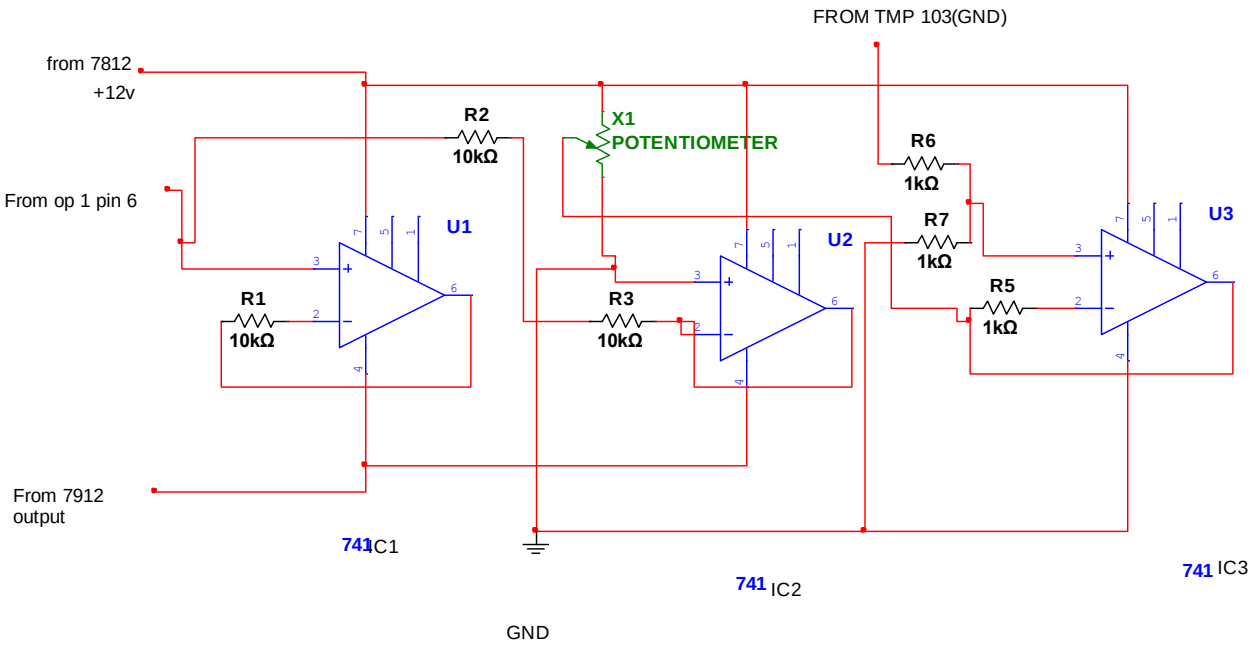

HARDWARE SETUP

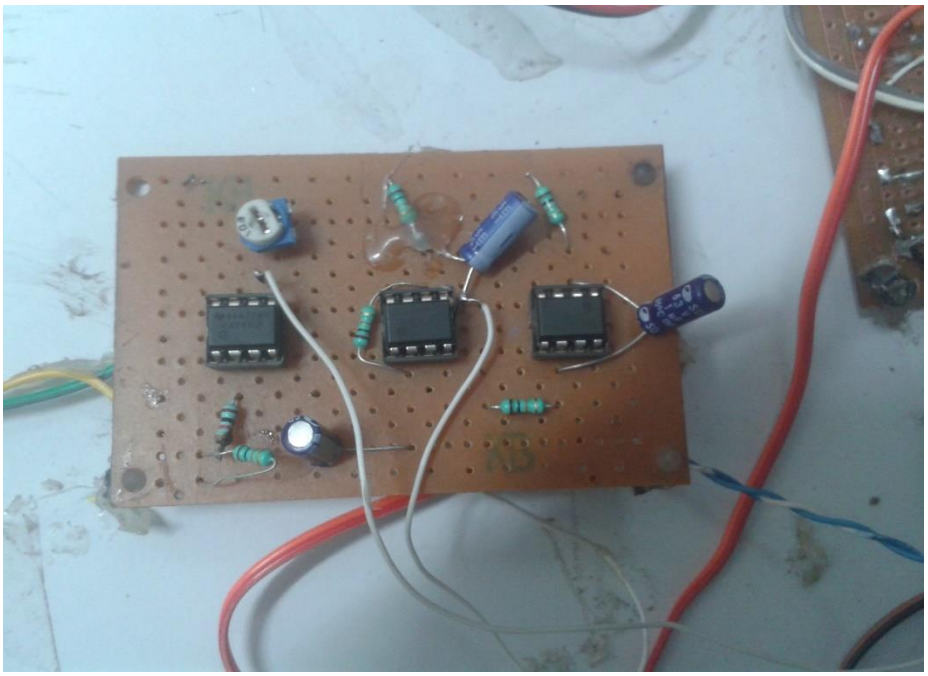

PCB BOARD OF PID CONTROLLER

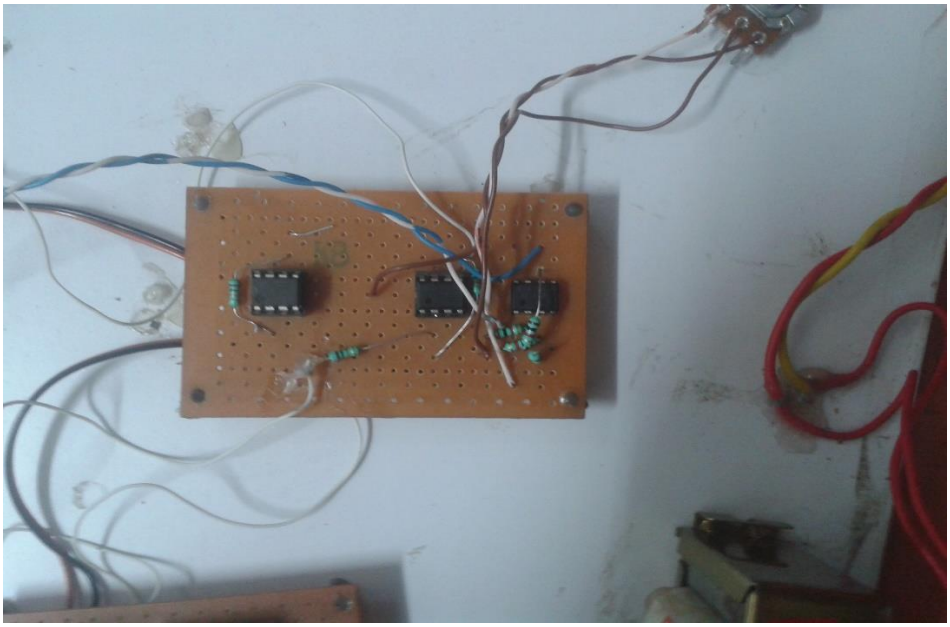

ADDER AND INVERTER

TABLE 4:-

COMPONENTS USED:-

Sl. No	**Components**	**Quantity**
a	OPAMPS (741)	8
b	100k pot	1
c	1M pot	2
d	100k resistors	8
e	1k resistor	2
f	1microFarad capacitor	1
g	10microFarad capacitor	2
h	Soldering kit	-
i	Multimeter	-
j	CRO	-
k	±18v power supply	-

TEST STAND

The principal technique refers to the test stand and test strategy, utilizing an signal function generator and a digital oscilloscope.

In the initial step, the accuracy of every control law of the PID controller will be independently demonstrated by applying a train of rectangular sign to the proportional, derivative and integral component. The acquired results are appeared in figure below. From those three outlines, the particular amplifying, derivative and integrative impact acknowledged by the PID controller can be seen.

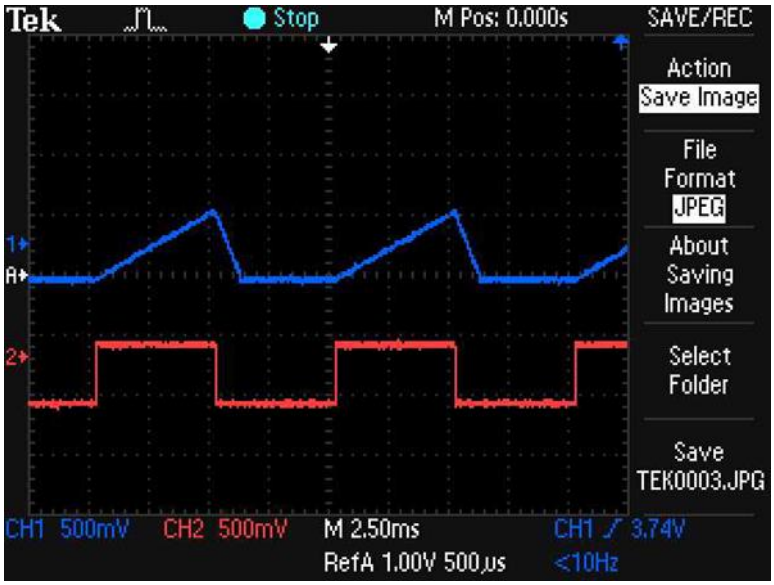

Response of PID controller with small k_p value

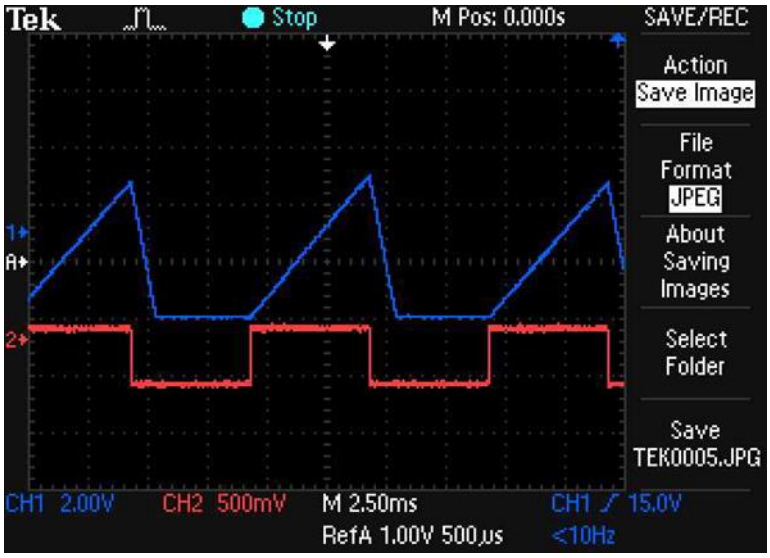

Response of the PID controller with large k_p value

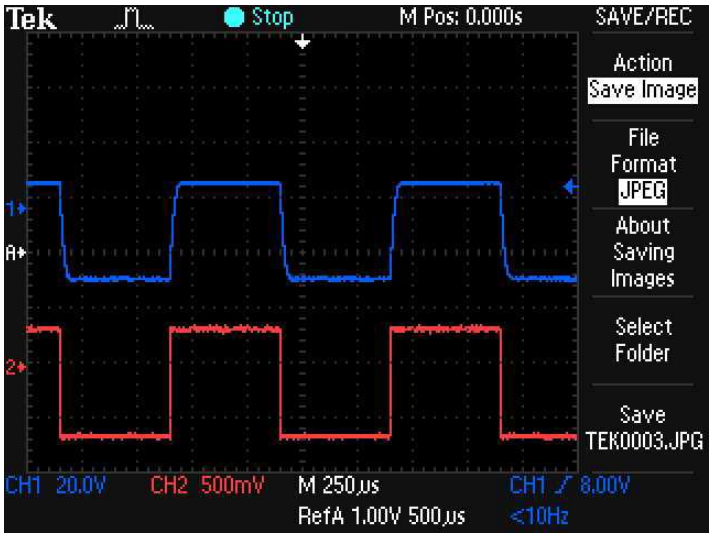

Output response of the PID controller
with k_p value and $k_d = k_i = 0$

RESULTS

The supply voltage given was ±15v through bread board supply. At that point the required test was performed. Subsequent to playing out the test on proportional controller it is found that the increase in the k_p value, decrease the amplitude of the sine waveform. The resultant waveform is in steady state of dc values and ripple free.

Here, derivative controller output was a square wave corresponding to a triangular input. The output of basic integral controller indicated both positive and negative peaks when a 1 micro Farad capacitor was utilized. At the point when the capacitor was supplanted by a 10 micro Farad capacitor the resultant waveform was same as input waveform with a large rise and decay time.

CONCLUSION

The controller response can be classified as far as the responsiveness of the controller to a error, the extent to which the controller overshoots the set point and the system oscillation. The PID controller offers the possibility to act with various control law. As per the integrator in the circuit concerned, the response had a slow rise and decay time. Thus, the analog PID controller was fabricated with suitable output waveforms.

FUTURE SCOPE

There is a great scope of research into this field of control system. This involves the realization of OPAMPS for tuning of the PID controller. The design of the controller is capable of ensuring closed loop stability for arbitrary order plants. But what lacks is the comparative analysis between different tuning techniques. This study would thus surely come handy to such need of comparative analysis and also help in understanding the changing trends in the field of PID controller design. Few of the recent trends in the field of PID control design are optimal design through graphical approach and minimization of error due to approximation in numerical analysis technique.

REFERENCES

[1] Nagrath, I.J. and Madan, Gopal, Control system engineering, 5th Edition, New Age International Publisher, 2007.

[2] Bennett, Stuart (1993), A history of control engineering, (1930-1955), IET. P.48. ISBN 978-0-86341-299-8.

[3] Y Li, KH Ang, GCY Chong, Patents, software, and hardware for PID control: An Overview and analysis of the current art, Control Systems, IEEE, 26 (1), 42-54 Available on: http://eprints.gla.ac.uk/3816/.com . Accessed on:13 November 2007

[4] Astrom, K. J. and Hagglund, T., PID Controllers: Theory, Design and Tuning, ISA Press, Research Triangle Park, NC,
Available on : https://en.wikipedia.org/wiki/PID_controller.com
Accessed on: 1995

[5] LM741 Operational Amplifier Texas Instruments.
Available: http://www.ti.com/lit/ds/symlink/lm741.com. Accessed on: LM741. SNOSC25D – MAY 1998–REVISED OCTOBER 2015.

[6] K. Astrom and T. Hagglund, "The future of PID control," Control Engineering Practice, vol. 9, no. 11, pp. 1163 – 1175.
Available: http://wenku.baidu.com/view/7cdc4a000740be1e650e9ada.html
Accessed on: 6 April 2001.

[7] Ang, K.H., Chong, G.C.Y., and Li, Y. (2005). PID control system analysis, design, and technology, IEEE Trans Control Systems Tech, 13(4), pp.559-576.
Available on: http://eprints.gla.ac.uk/3817/1/IEEE3.com.
Accessed on: 2005